ROCKY MOUNTAIN POWER

Let's turn the answers on.

Home Energy Savings Program

Idaho
Technical Specifications Manual

Version 3.0
Release Date – January 1, 2016

Table of Contents

Foreword from the Home Energy Savings Program

This Technical Specifications Manual articulates the Rocky Mountain Power Home Energy Savings Program requirements for HVAC, plumbing, and weatherization equipment and service measure installations. This manual is intended to ensure the safety, durability and energy efficiency of customers' homes and provide valuable technical resources for installers.

The weatherization and mechanical specifications included in this manual describe the installation requirements for measures that are eligible for cash incentives. **For specific Program requirements, such as eligible measures, please refer to the appropriate Trade Ally Program Manual. The Program will conduct quality assessment reviews in accordance with applicable specifications and Program requirements.**

This manual goes into effect on January 1, 2016. Please familiarize yourself with these updates and make sure you are aware of any changes relevant to your work.

For more information, please email HESTradeAllyRMP@rockymountainpower.net or call the Home Energy Savings Trade Ally Hotline, 1.800.942.0281, option 1.

Sincerely,

The Rocky Mountain Power Home Energy Savings Team

IN—INTRODUCTION

IN 1.0—Program Goals and Eligibility

The Rocky Mountain Power Home Energy Savings Program (Program) offers cash incentives on a variety of HVAC, plumbing, and weatherization equipment and services. The Program promotes installation practices that are designed to maximize system performance and efficiency. By helping customers minimize their energy use, the Program saves customers money on their energy bill and also reduces the growing demand for power in the region.

The main purpose of weatherization installations is to prevent winter heat loss or summer heat gain from conditioned indoor spaces to unconditioned or outdoor spaces. Conditioned space is defined as an enclosed area within a building that is heated or cooled and designed, or modified, to have a complete and effective pressure boundary. Garages, barns, unattached shops, sheds, unfinished attics and crawlspaces are considered unconditioned space for the purposes of incentive qualification. A garage is defined as any space, heated or unheated, that features a large door designed to permit the entry of an automobile. Weatherization measures shall be installed in the thermal envelope—or building shell—of a home. These areas are typically defined by the separation of conditioned and unconditioned spaces, or between a conditioned space and the outside of the house. To be eligible for a Program insulation incentive, all insulation shall be in contact with a continuous and effective air barrier. Sheetrock, plywood and foam board are examples of air barrier materials; fiberglass batt-type insulation is not considered an air barrier.

Plumbing and HVAC equipment and service measures are intended to improve performance and efficiency of space and water heating and cooling equipment. All measure qualifications shall be met including compliance with qualified fuel type, floor area served by equipment, and existing equipment.

To be considered a complete measure and eligible for incentives, a measure shall meet all specifications and requirements listed in:

1. The relevant sections of this manual
2. The relevant sections of the Trade Ally Program Manual
3. The relevant incentive application form(s)
4. The relevant Trade Ally Participation Agreement(s)

Resources and additional information can be located at: http://homeenergysavings.net/

The Technical Specifications Manual may not cover every situation. If you have questions, email the Home Energy Solutions Trade Ally Team atHESTradeAllyRMP@rockymountaingpower.net or call 1.800.942.0281, option 1.

IN 1.1—Code Compliance, National and Regional Standards

In cases where federal, national, regional, state or local code or regulation exceeds the requirements herein, the code or regulation shall apply. If the federal, national, regional, state or local code or regulation does not exceed the requirements herein, the requirements contained in this Technical Specifications Manual shall apply. Examples of national and regional

regulations include, but are not limited to, building permit, asbestos, lead, combustion appliance, vermiculite, knob and tube wiring, and fire safety requirements.

It is the contractor's sole responsibility to conform to all applicable codes and regulations for installing mechanical equipment in existing homes. Where applicable codes exceed these specifications, installation shall comply with code minimums.

Contractors bear sole responsibility for complying with all relevant state and national guidelines where the presence of regulated materials is known or suspected, in order to ensure technician and occupant safety. Where the presence of regulated materials is known or suspected, contractors are encouraged to consult guidelines from, but not limited to:

Idaho Department of Environmental Quality (DEQ): http://www.deq.idaho.gov/
Occupational Health and Safety Division (OSHA): https://www.osha.gov/
Environmental Protection Agency (EPA): http://www.epa.gov/lawsregs/topics/
Building Performance Institute (BPI): http://www.bpi.org/tools_downloads.aspx?selectedTypeID=STD

IN 1.2—Knob and Tube Wiring

Active knob and tube wiring in attics, walls or floors shall be decommissioned and removed before insulation is added. Alternatively, the electrical system shall be inspected and shall receive written approval by a certified electrical inspector or general supervising electrician employed by a licensed electrician before insulation is added. A copy of any such written approval shall be provided to the customer and, upon request, to the Program. Insulation of attics, walls or floors with knob and tube wiring shall adhere to state and local code.

Refer to WA 1.1 for additional information on insulating exterior wall cavities that contain active knob and tube wiring.

IN 1.3—Materials

Materials used in the Program shall meet or exceed applicable state, federal or local code and regulations. All materials shall be installed to the manufacturer's specifications. The Program does not keep a list of approved products. Material information shall be provided to the Program, upon request. Adherence to applicable codes and regulations is the responsibility of the contractor or building owner. The Program reserves the right to reject the use of materials and supplies it deems unacceptable.

IN 1.4—Foam Insulation

Foam insulation shall be installed in compliance with the manufacturer's specification and in compliance with thermal and ignition barrier requirements for foam plastics, as defined by the prevailing jurisdictional building code.

When installing foam insulation products, the manufacturer's name and product identification shall be left with the homeowner and presented to a Program representative for review, upon request, during the Quality Assurance process.

IN 1.5—Work Quality Verification Process

After eligible measures are installed, a Quality Assurance verification may be required to ensure compliance with Program specifications. The Program will conduct Quality Assurance verifications based solely upon incentive-qualifying measures. **If the installed eligible measures do not meet these specifications, the Program will notify the customer and contractor of the deficiencies and follow up with the contractor to perform corrective actions. The Program does not guarantee energy savings or performance of the installations under this Program. The Program does not assume responsibility for enforcing or determining compliance with codes and regulations or their interpretation.** The Quality Assurance verification is limited to measures or sections of measures that are reasonably visible from normal access locations. A reasonable effort will be made to see a representative sample of the measure.

To ensure the work qualifies for incentives, the homeowner is responsible for discussing with the contractor any discrepancies between the work contracted and Program requirements.

IN 1.6—Illustrations

This manual features illustrations for clarity. All illustration details are considered requirements for the weatherization measures installed.

IN 1.7—Human Contact Areas

To receive a Program insulation incentive, fibrous insulation in human contact areas shall be covered with a vapor-permeable air barrier—such as ½" gypsum board or house wrap—to limit occupant exposure. Human contact areas may include attics, basements, garages and/or storage areas where occupants go for routine maintenance, storage or access. Vertical and overhead surfaces containing fibrous insulation and located in human contact areas shall also be covered. All covering shall meet applicable codes.

IN 1.8—Permits and Remodeling Projects

Incentives will not be issued for attic, wall or floor insulation improvements in existing homes if homeowners are required to make the upgrades to meet building code requirements (such as when a structural or mechanical permit is required). For example, if the exterior or interior wall sheathing is removed during a kitchen remodel project to update electrical or plumbing systems, the insulation added to repair the wall—returning it to building code requirements—is not eligible for incentives. However, the remaining walls in the home that are unaffected by the permit are eligible for standard incentives if the work meets Program requirements.

Contact the trade ally team at HESTradeAllyRMP@rockymountainpower.net or call 1.800.942.0281, option 1 for additional information regarding incentives eligibility for a remodeling project.

IN 1.9—Equipment Maintenance

All equipment used for diagnostics, installation of insulation, safety, or other weatherization purposes shall be used in accordance with the manufacturer's instructions and shall be properly maintained and calibrated.

IN 1.10—Combustion Safety

It is the responsibility of the Trade Ally to ensure that all combustion appliances contained within the confines of the structure are properly and safely vented, operating, and have suitable combustion air before and after duct sealing occurs and to ensure that all applicable state/local laws, codes, and standards are met and the indoor air quality of the dwelling is not compromised. A combustion appliance is any fuel-burning appliance including ovens, dryers, water heaters, and space heating systems that utilizes natural gas, propane, oil, kerosene, or wood.

A functioning and properly installed (in accordance with manufacturer's specifications) UL-listed carbon monoxide alarm is required when a combustion appliance is present within the confines of the structure when duct sealing is performed

See sections DU for more information.

IN 1.11—Determination of Existing R-Values

The total R-Value for a floor or an attic shall be calculated based on the depth of the insulation (in inches) multiplied by the recognized R-Value per inch of the insulation material.

The manufacturer-rated R-Value of an insulation batt shall be used in cases where the batts are labeled with a visibly recognizable manufacturer specification.

Refer to Appendix A for guidance in determining average R-Values for surfaces with varying levels of insulation.

Refer to Appendix B for a listing of the Programs recognized R-Values for insulation.

Willful violation of these guidelines and/or gross misrepresentation of existing insulation levels shall result in disqualification of the project in question from receiving incentives. Repeated violations may result in removal from the Trade Ally Network.

IN 1.12—Requirements for All Mechanical System Installations

Mechanical equipment shall be installed according to the manufacturer's specifications, except in circumstances where prevailing jurisdictional codes or Program standards exceed those specifications, in which case the applicable codes or Program standards shall be followed. Mechanical equipment shall be installed as a permanent fixture on the property, including any connections to the home's electrical wiring or water piping, and including exhaust ventilation ductwork, if applicable. Mechanical equipment shall have a clearly visible, permanent, factory-affixed label identifying the serial number, make, and model number of the unit. Mechanical equipment shall in no way compromise the structural integrity of the area in which the unit is being installed.

IN 1.13—Additional Requirements for Heating System Condensation Drains

Condensation produced by the operation of the HVAC system or heat pump water heater shall be removed from the area of installation via an adequately sloped drainage system, condensate pump or connection to an existing plumbing drain. Condensation shall slope downhill and flow to a suitable termination point. Defrost or condensate cannot run onto walkways or driveways where it may pose a safety hazard.

PART 1: WEATHERIZATION

AT—ATTIC INSULATION

AT 1.0—Introduction

This section lists work and details that shall be performed before insulation is installed in attics and specifications for how to install insulation and attic-related ventilation. Insulation shall be installed to reduce heat loss between conditioned and unconditioned spaces.

To be considered a complete measure and eligible for incentives, attic insulation shall:

1. Comply with the complete measure guidelines listed in section IN 1.0
2. Be installed in an area between conditioned living space and unconditioned space that is eligible for incentives
3. Bring the connected, accessible unconditioned space into compliance with the applicable requirements listed in section AT (Refer to Illustrations AT 1.0a through AT 1.0d)

Refer to IN 1.11 for the Program procedure for determining the R-Value of existing insulation. In cases where varying levels of insulation exist in an attic, Appendix A shall be used to determine whether the whole attic area qualifies for incentives. If not, only the area of attic that meets incentive criteria shall be claimed for incentives. The Program does not require that existing insulation in attic areas be increased if the existing insulation level is greater than the incentives qualification criteria.

Situations where insulation has been contaminated by vermin shall not be used to de-rate the insulation's R-Value.

Illustrations AT 1.0a through AT 1.0d (next page) provide guidance for installing incentive-eligible attic insulation in a variety of situations.

Illustration AT 1.0a

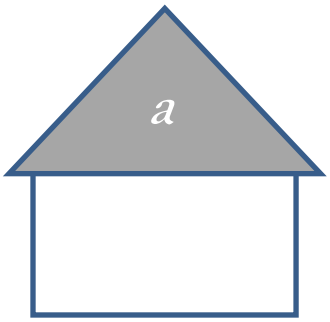

Illustration AT 1.0b

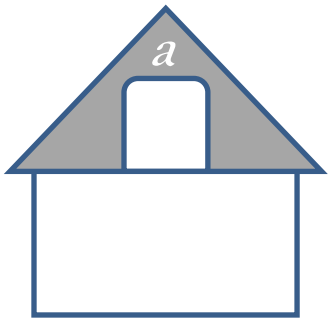

AT 1.0a: A flat attic space over the entire living space. The entire attic area "*a*" shall be brought into compliance with the requirements of section AT.

AT 1.0b: A rake and crown attic space with vented sloped cavities. The entire attic area *"a"*—all connected rakes and crown—shall be brought into compliance with the requirements of section AT.

Illustration AT 1.0c

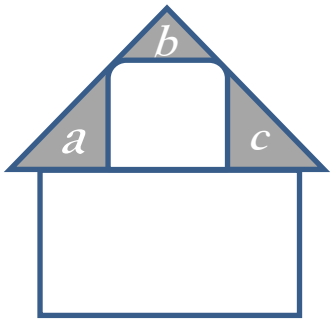

Illustration AT 1.0d

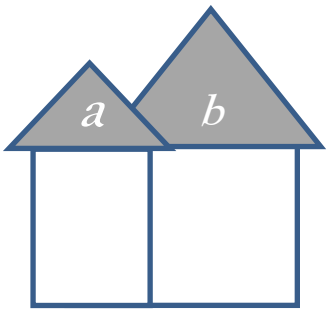

AT 1.0c: A rake and crown attic space with unvented sloped cavities. Only the specific area where attic insulation is being installed— *"a,"* *"b"* or *"c"*—is required to comply with section AT.

AT 1.0d: Two flat attics physically separated from one another. Only the specific area being insulated— *"a"* or *"b"* —is required to comply with section AT.

AT 1.1—Attic Air Sealing

The Program strongly recommends, but does not require, attic air sealing prior to installation of attic insulation.

Refer to Appendix D for guidance on air sealing attics.

AT 1.2—Passive Attic Ventilation

Enclosed attics and enclosed rafter spaces shall have cross ventilation for each separate space.

Ventilating openings shall be protected against the entrance of rain and snow. The net free-ventilating area shall be not less than 1/150 of the area of the space ventilated, except that the area may be 1/300, provided no more than 60% of the required ventilating area is provided by ventilators located in the upper portion of the space to be ventilated.

If an attic vent is used as an exhaust duct termination it shall not be included in passive attic vent area calculations.

Vent openings shall be covered with corrosion-resistant metal mesh with mesh openings of maximum 1/4 inch in dimension.

The vent area shall be the NFA, defined as the actual open area of the vent after subtracting any area blocked by screens or louvers. All vents shall be screened.

Air turbines shall not be installed in order to meet the ventilation requirements of these specifications; however, ventilating area of existing air turbines may be included by estimating the net free ventilating area of the air turbine in a locked, non-rotating position.

AT 1.3—Baffles for Passive Attic Vents

Eave and soffit vents shall be baffled to prevent wind washing through the insulation and blockage of the vent; all insulation types shall comply. Baffles shall be installed before adding more insulation and maintain an opening equal to or greater than the size of the vent. Baffles shall be fastened to roof rafters with at least 9/16" staples or roofing nails. Anchor points shall be spaced no more than 4" apart down each side in the upper half of the baffles. Baffles shall be rigid, impervious to wind, and resistant to moisture. All baffles shall extend 4" above the final level of insulation.

Illustration AT 1.3

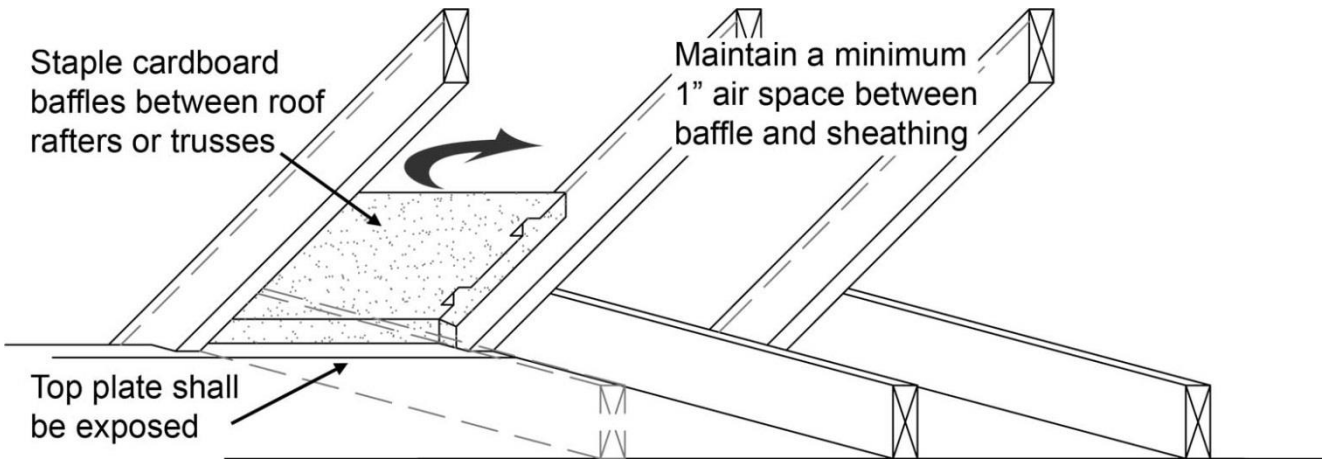

A continuous dam shall be installed along soffits or eaves that have vents and are completely open to the attic. Where a continuous soffit vent exists, baffles shall be installed somewhat equally spaced along the length of the soffit and allow enough NFA to satisfy the lower ventilation needs, based on the standard set in section AT 1.2. Bays that are not baffled and are open to a soffit shall be blocked and sealed with a rigid moisture-resistant material so blown product is not able to enter the soffit. Baffles shall be installed far enough into the bay to reach the exterior side of the top plate. It is acceptable for compression to occur due to a narrowing roofline. Baffle installation will allow for the highest possible R-Value above the top plate of the exterior wall while maintaining 1" for proper ventilation.

Any other passive ventilation opening, such as gable or roof vents, within 6" of the final insulation level shall be baffled with a rigid material such as moisture-treated cardboard.

AT 1.4—Dams

Dams shall be installed where final levels of loose-fill insulation differ. Common areas requiring a dam include raised or dropped ceilings, the sides of vaulted ceilings, and between insulated and uninsulated areas such as garages. Dams shall be installed to maintain a consistent R-Value by one of the following methods:

1. A durable, rigid material such as plywood, oriented strand board, moisture-treated cardboard or foam board installed along the full length of required area and extending 4" above the final level of insulation. Rigid dams shall be mechanically and securely fastened.
2. An insulation batt a minimum of 14½" wide with an R-Value equal to or greater than that specified for the attic, laid flat along the full length of the required area. Insulation batts used as a dam shall be installed so that no gaps or voids exist.

Insulation dams as described in AT 1.10 are required around attic accesses and for porch roofs adjacent to the attic above conditioned space.

Refer to AT 1.10 for specifications for damming attic accesses, sloughing is not permitted

Illustration AT 1.4

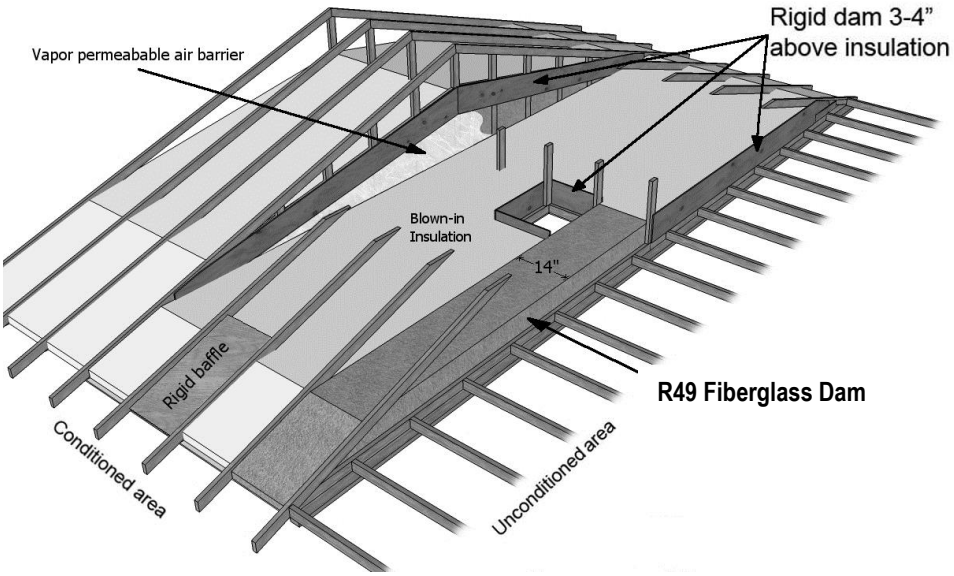

AT 1.5—Baffles for Chimneys, Flues and Other Heat Sources

To prevent heat buildup, insulation shall not be in contact with fixtures as described on next page (see table 1.5b to determine baffle requirement). When needed, baffles shall keep the insulation at least 3", but not more than 4", from the sides of the heat-producing fixtures. Baffles shall extend at least 4" above the final level of insulation (See Illustration AT 1.5a).

Some unfaced fiberglass batt insulation and loose fill brands meet the ASTM E-136 noncombustible rating. Kraft paper facing does not meet this rating. Contractors may install non-combustible insulation (labeled as meeting ASTM E-136) with no clearance around double wall flues if permitted by local code.

Illustration AT 1.5a

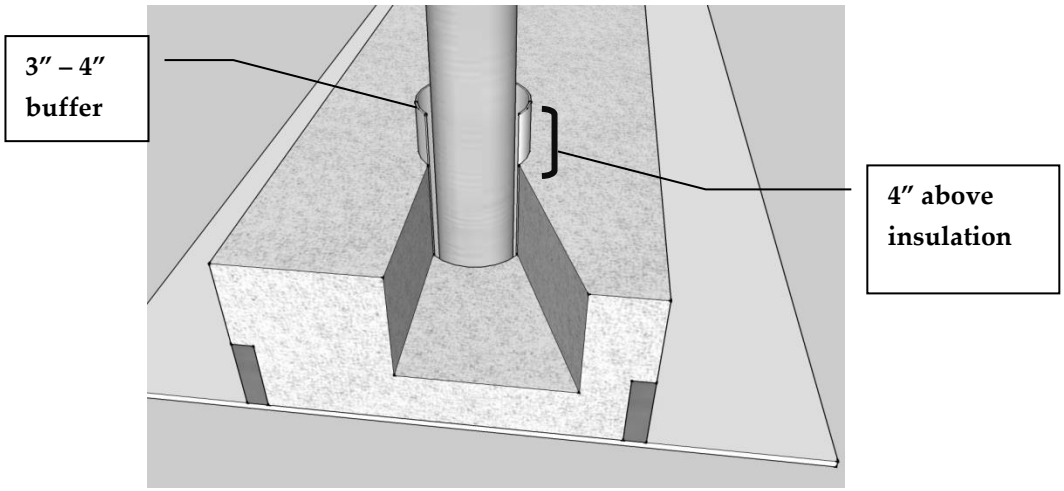

Table AT 1.5b

Heat-Producing Fixture Type	**Baffle type for insulation rated as noncombustible (ASTM E-136)**	**Baffle type for insulation NOT rated as noncombustible**
Metal flue	ASTM E-136 compliant	ASTM E-136 compliant
Masonry chimney	No baffle required	ASTM E-84 compliant
Transformers	ASTM E-84 compliant	ASTM E-84 compliant
Non-IC-rated vented fan/heater combination	ASTM E-84 compliant	ASTM E-84 compliant
Miscellaneous electrical	ASTM E-84 compliant	ASTM E-84 compliant
Non-IC-rated recessed light	ASTM E-84 compliant	ASTM E-84 compliant
IC-rated recessed light	No baffle required	No baffle required
Vented exhaust fans	No baffle required	No baffle required
Extra-low voltage electrical*	No baffle required	No baffle required
Modern thermoplastic-insulated electrical wiring	No baffle required	No baffle required

*Extra-low voltage is defined as < $50V_{rms}$ AC, or < 120V DC.

ASTM E-136 compliant baffles are noncombustible and shall be made of rigid material (e.g. sheet metal) and secured with noncombustible mechanical fasteners. Tape is not a mechanical fastener.

ASTM E-84 compliant baffles are fire-resistant (e.g. gypsum board). If necessary, ASTM E-84 compliant baffles shall be secured using fire-resistant fasteners. All ASTM E-84 compliant baffles shall be rigid enough to maintain the required minimum spacing (see Illustration AT 1.5a).

AT 1.6—Bath and Exhaust Fans

All exhaust fans shall be vented to the exterior of the structure and secured to the exterior sheathing with no gaps to prevent exhaust air from re-entering the attic (see Illustration AT 1.6). At least one functioning damper shall be present in each system, either at the fan or where vented to the outside. It is highly recommended that exhaust ducts traveling through unconditioned space be insulated to prevent condensation.

Exhaust fans shall be vented to the nearest feasible location. Vent duct shall be sheet metal or HVAC flex-duct and insulated to a minimum of R-4 when required for code compliance. Vinyl coil duct is not allowed. Vent ducts shall not sag, shall be as straight as possible to maximize effective airflow, and shall have no more than two 90-degree turns, or equivalent. Sags, turns, bends and elbows restrict air movement and effective airflow from the exhaust device. If an attic vent is used for fan exhaust, it shall not be included in attic vent area calculations (see section AT 1.2).

Vent ducts shall be securely attached at each joint and to the fan housing using mechanical fasteners, such as screws or mechanically tightened metal clamp-type straps. Mechanical fasteners shall not interfere with damper movement. The exhaust boot assembly shall be securely and mechanically fastened where it vents to the exterior of the structure (see Illustration AT 1.6). Sealing materials such as tape, caulk and foam are not acceptable mechanical fasteners. Mastic, UL-listed metal HVAC tape, or mastic tape may be used to seal gaps in exhaust ducts. Duct tape is not an approved material for sealing or supporting exhaust fan ducts.

Existing flexible plastic or metal vent ducts may remain if they are free of holes and kinks and are in otherwise good condition. Existing plastic or metal ducts shall be vented to the exterior, free of gaps and sealed to prevent exhaust air from re-entering the attic.

Illustration AT 1.6—Exhaust boot connected to sheathing

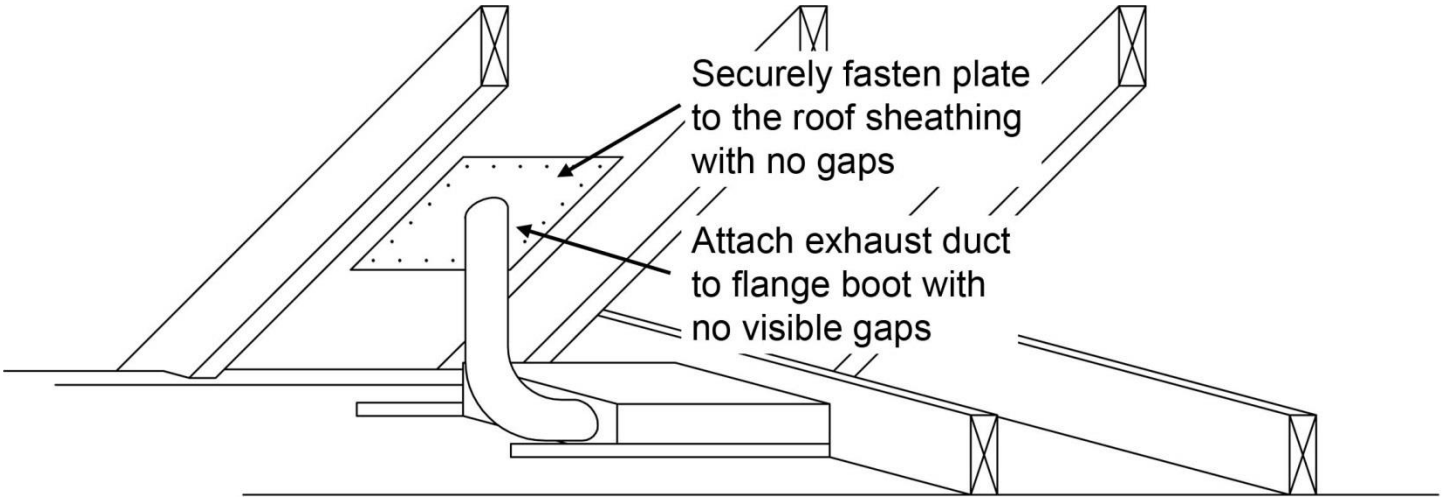

AT 1.7—Kitchen Fans

Kitchen exhaust fans shall be vented to the exterior of the structure and secured to the exterior sheathing with no gaps to prevent exhaust air from re-entering the attic. Existing rigid or flexible metal ducts may remain, but existing plastic ducts shall be replaced. Sealing materials such as tape, caulk and foam are not acceptable mechanical fasteners. Mastic, UL-listed metal HVAC tape, or mastic tape may be used to seal gaps in exhaust ducts. Duct tape is not an approved material for sealing or supporting exhaust fan ducts.

If a new exhaust duct is required for a kitchen stove, it shall be at least 28-gauge galvanized steel, stainless steel, copper or aluminum and have a smooth interior surface. The exhaust duct shall be airtight and extend directly into a code-approved metal vent cap.

Vent ducts shall be securely attached at each joint and to the fan housing using mechanical fasteners. The exhaust duct shall meet manufacturer's requirements and all local building codes. At least one damper shall be functioning in each system, either at the fan or where it vents to the outside. Exhaust ducting shall be insulated to a minimum of R-4 when required for code compliance.

See UN 2.7 for downdraft exhaust fan venting requirements.

AT 1.8—Dryer Exhaust Fans

Dryer exhaust venting that travels through the attic shall comply with AT 1.6. Refer to UN 2.6 for dryer exhaust ventilation specifications.

AT 1.9—Water Pipes in Attics

If water pipes exist in the attic, they shall be insulated to meet specification UN 2.3.

AT 1.10—Interior Attic Access Doors

All operable attic accesses opening to interior spaces shall be insulated, weatherstripped and protected from having loose-fill insulation fall through the opening. Weatherstripping shall be permanently attached to create an effective air seal between the attic access frame and the door. Accesses with air leaks that cannot be weatherstripped shall be repaired or replaced prior to insulating. Weatherstripping shall not prevent easy operation of doors, latches or bolts.

All operable accesses shall remain operable, unless the access is sealed off in favor of another existing or a newly created access. Work performed in an inaccessible area that will remain inaccessible after project completion shall be documented with photographs detailing the project's compliance with relevant specifications.

Ceiling accesses shall be insulated to R-30 with batt-type or rigid insulation. Knee wall accesses shall be insulated to a minimum of R-15.

Batt-type insulation shall be attached to the door with twine stapled to the edges of the door. Stapling the insulation directly to the door is unacceptable. Rigid insulation may be fastened to the door in lieu of batt-type insulation.

Alternatively, R-5 or greater rigid insulation installed between the access cover and a rigid protective material (OSB, plywood or other durable rigid material) attached over the entire access cover area is permissible. Insulation shall be sealed around the perimeter to the access cover using caulk, adhesive or spray foam. Access-cover assembly shall be tightly sealed using weatherstripping around the entire perimeter.

Illustration AT 1.10—Interior attic and knee wall accesses shall be insulated and weatherstripped.

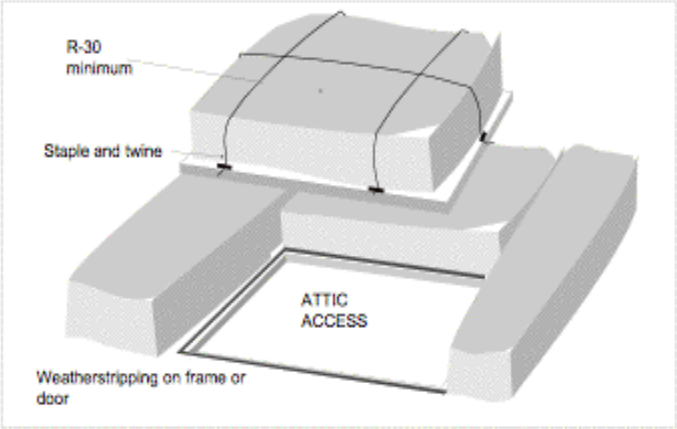

Attic accesses shall be protected from having loose-fill insulation fall through the opening. The full level of ceiling insulation shall be maintained to the edge of the attic access opening by one of the following methods:

1. The opening may be framed with wood or plywood boards. The framing shall be permanently attached and extend at least 4" above the final level of insulation. Cardboard and foam board are not acceptable materials for attic access damming.

2. An insulation batt a minimum of 14½" wide laid flat, with an R-Value equal to that specified for the attic, may be placed tightly around the perimeter of the access opening. This 14½" width shall be maintained in all outward directions from the access opening, including corners. Insulation batts used as a dam shall be installed so that no gaps or voids exist.

AT 1.11—Pull-Down Stairs

Pull-down stairs in conditioned areas shall be weatherstripped and insulated to a minimum of R-10. Insulation and weatherstripping shall not prevent easy operation of the stairs. Factory or site-built pull-down-stair covers, or airtight boxes made of foam board and sealed with caulk, shall have a minimum of R-10.

Factory-built pull-down-stair assemblies with a minimum R-5 insulation rating will be permitted provided the insulation is between conditioned space and the attic stair assembly and air infiltration is prevented by gaskets or weatherstripping.

AT 1.12—Exterior Attic Access Doors

Any outside access shall have a door that is easily opened to permit inspection, and shall be weatherproof and vermin-proof.

AT 1.13—Vertical Walls in Attic Spaces

Any vertical wall in an attic that separates conditioned space from unconditioned space shall be sealed for air leaks and shall be insulated to fill the cavity. Insulation shall be secured and covered with a vapor-permeable air barrier. Vertical walls may include side walls of vaults, skylights, transitions in ceiling height or other surfaces. See AT 2.6 for Program requirements for rake and crown attics.

In cases where no wall exists between conditioned and unconditioned space, a wall shall be constructed using a rigid, permanent material, air leaks shall be sealed, and insulation shall be installed.

Illustration AT 1.13

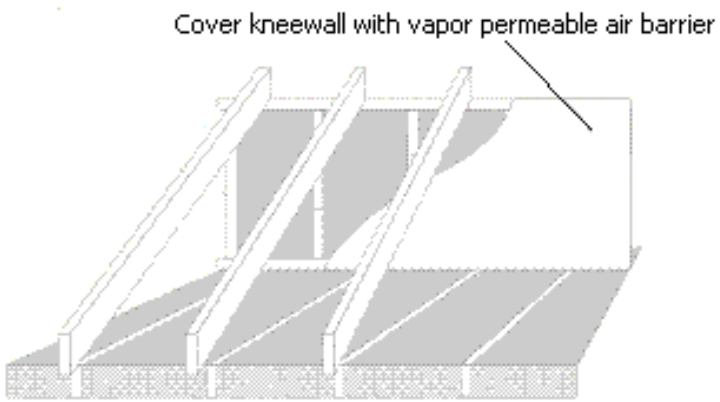

AT 2.0—General Attic Insulation Requirements

Attic insulation shall be in contact with the conditioned area of the home and shall be installed so there is no air space between the insulation and the conditioned area.

Degradable and absorbent scrap materials, especially wood and cardboard, shall be removed from the attic. The roof and attic shall free from water leaks and moisture damage prior to performing work.

In attics with no existing insulation, vapor retarders, such as kraft facing on fiberglass batts, shall face the conditioned area of the building. New insulation with a vapor retarder shall not be installed on top of existing insulation. Insulation assemblies shall have no more than one vapor retarder, and it shall be in contact with the conditioned surface.

If existing attic insulation has a vapor retarder on its top surface, remove the vapor barrier from the insulation material, replace the insulation material, or reorient the existing insulation so vapor retarders are in contact with the conditioned surface.

If the added attic insulation compresses the existing insulation, the final R-Value shall be the Program required minimum or greater. After installing the insulation, eave and soffit vents shall remain unblocked.

AT 2.1—Installing Loose-Fill Insulation

Loose-fill insulation shall be level and smooth with a uniform R-Value. Installation of loose-fill insulation shall comply with baffling and damming requirements as defined in AT 1.3, 1.4 and 1.5. Toward the eaves, where a sloping roof prevents insulation from being installed to Program minimums, insulation shall be installed up to the roof decking to maximize R-Value. In soffit-vented assemblies, insulation shall be installed up to the baffles. If new insulation will be blown over existing insulation, the existing insulation shall be in contact with the air barrier.

AT 2.2—Installing Batt-Type Insulation

If batt-type insulation is installed, prepare the attic in the way described for loose-fill insulation. As stated in AT 2.0, do not install vapor retarders over existing insulation. In attic areas where no insulation exists, batts with vapor retarders may be used. The vapor retarder shall be in contact with the ceiling.

Batts shall be cut to fit and placed tightly together with no gaps, except those required for clearance around heat-producing fixtures. Where practical, place one row of batts between the joists and another row of batts on top of the first row and at right angles to the joists. When lower ventilation exists, baffling is required to ensure effective R-Value and prevent wind washing of insulation. Refer to AT 1.3 for baffling requirements.

When installing foam insulation products, the manufacturer's name, product identification and information to determine the end use shall be left with the homeowner and presented to an the Program representative for review during the QA process. Foam insulation shall comply with thermal and ignition barrier code requirements for foam plastics as defined by local building code.

AT 2.3—Floored Attics

Cavities below decked storage areas above a conditioned space shall be insulated to the highest practical level. To fill cavities, decking shall be removed or holes can be drilled no more than 4 feet apart. If loose-fill insulation is used, joist cavities shall be tightly packed with insulation. Decked storage areas shall not be included in the square footage calculation of the insulation incentives when they are insulated to less than Program minimums and exceed 5% of the attic area or 64 sq. ft., whichever is greater. When decked storage areas are less than 5% of the attic area or 64 sq. ft., they may be included in the incentives area calculation. When unusual circumstances allow for only the cavity to be filled, contact the Program for incentive information. Refer to AT 1.4 for damming requirements for decked storage areas.

AT 2.4—Vented Vaulted Ceilings

If insulation is added to a vented vaulted ceiling, a 1" air space shall be maintained above the insulation. Each cavity shall have an upper and a lower vent.

AT 2.5—Unvented Vaulted Ceilings

If insulation is added to an unvented vaulted ceiling, it shall be filled with tightly packed insulation.

AT 2.6—Insulating Rake and Crown Attics

When insulating rake and crown attics, a continuous thermal boundary shall be created to be considered a complete measure. If rake attics are considered unconditioned space, knee wall accesses shall be insulated to R-15 and weatherstripped to create an effective air seal. If the rake is used for storage, fibrous knee wall door insulation shall be covered to prevent human contact. Refer to IN 1.7 for further information. Foam-core doors with a minimum R-5 insulation rating (manufactured for exterior use) will be permitted in knee wall door installations, provided gaskets or weatherstripping prevent air infiltration around the entire door perimeter.

Illustration AT 2.6

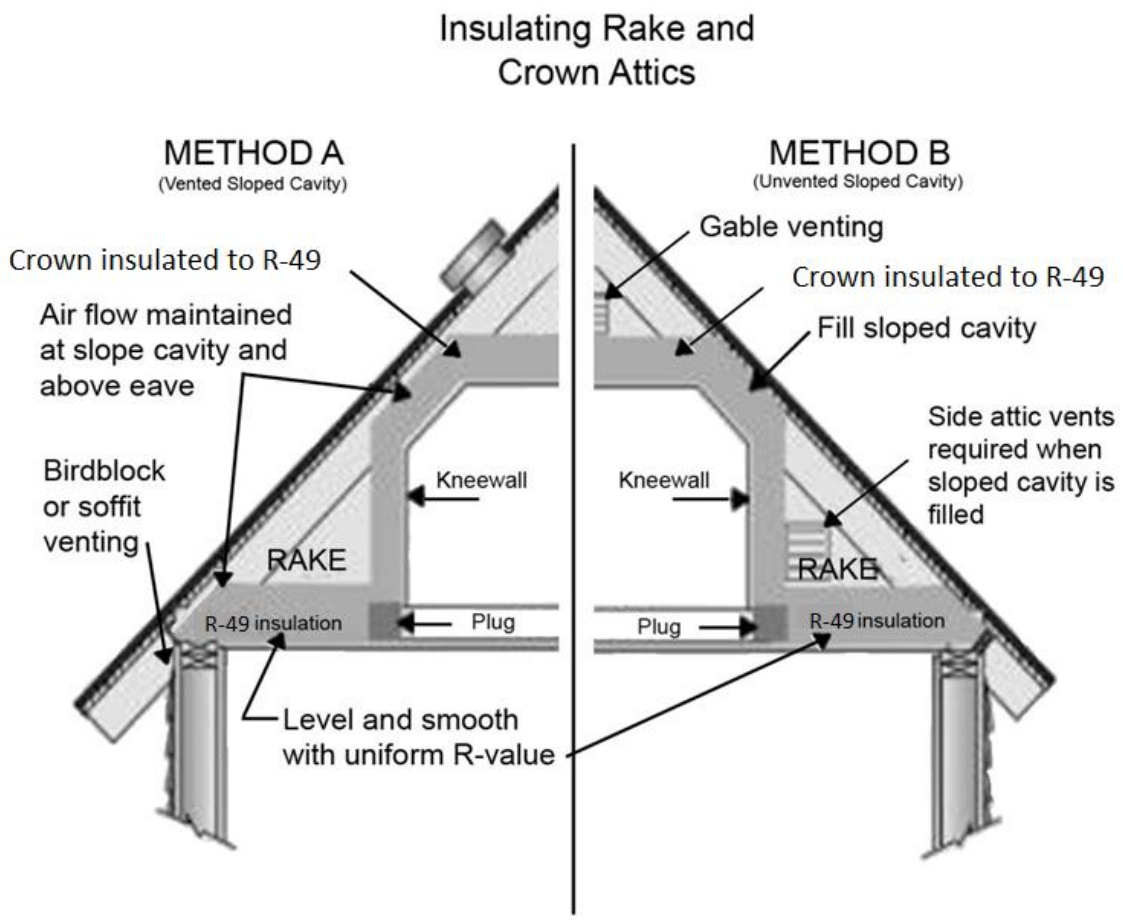

Use one of the following methods to treat a rake and crown attic. In all cases, the sloped cavity and crown shall be insulated unless physical barriers exist.

Method A

If the upper and lower passive ventilation calculation requires air to move from rake to crown, a 1" air space shall be maintained between the insulation and the roof deck with continuous baffle or equivalent. Knee walls shall be sealed for air leaks and shall be insulated and covered with a vapor-permeable air barrier. Knee walls shall be treated according to this requirement, regardless of existing insulation levels. Cavities where the knee wall reaches the rake floor shall be plugged with an air barrier and sealed using caulk or foam. Rake insulation shall be in contact with plugs. Refer to Illustration AT 2.6.

Method B

If rake and crown attic spaces have adequate ventilation independently, the sloped cavity may be completely filled. Loose-fill insulation may be used as long as the lower opening of each cavity is dammed with a rigid, vapor-permeable material to prevent insulation from falling out of the cavity.

Knee walls shall be sealed for air leakage, and shall be insulated and covered with a vapor-permeable air barrier, regardless of existing insulation levels. Cavities where the knee wall reaches the rake floor shall be dammed or plugged with an air barrier and sealed using caulk or foam. Rake insulation shall be in contact with plugs. Refer to Illustration AT 2.6.

AT 2.7—Interior Roof Insulation

Open attic spaces may be treated as conditioned space if air-impermeable insulation is installed. Air-impermeable insulation includes spray foam, rigid foam with appropriate sealants, or other materials as defined by the International Residential Code, or IRC. Insulation shall fill the roof rafter cavity, and all roof framing shall be insulated to a minimum of R-3. If rigid board is used, all seams shall be sealed using foam or caulk. Refer to IN 1.4 for foam insulation requirements.

If insulation is not considered a vapor retarder, then a vapor retarder shall be installed on the conditioned side of the insulation. If the space is intended to be habitable or if there is a combustion appliance in the zone, applicable thermal and ignition barrier requirements shall be met.

AT 2.8—Low-Sloped, Flat Roofs and Exterior Roof Insulation

Building permits and code compliance are the responsibility of the homeowner and Trade Ally. Program preapproval is required for all low-sloped and flat roofs that cannot be insulated to Program minimum requirements.

When installing rigid insulation on top of or beneath roof sheathing, the overall assembly shall be insulated to a minimum of R-20, or recommended values stated by the International Residential Code, or the highest R-value approaching R-20 which is practical. Insulation shall not be applied to roofs over ventilated cavities. (e.g., vaulted ceilings) with ventilated spaces, attics, sloped ceilings connected to attics and/or knee wall spaces, etc. Ventilated cavities of flat or sloping roofs shall not be blocked. Insulation shall be in a rigid board form and roof drainage systems shall function after insulation is installed. Recessed lights in insulated cavities shall be Insulation Contact and Air Tight (ICAT) rated. All penetrations through the roof covering and all joints between the roof covering and vertical surfaces (e.g., walls, chimneys, etc.) shall be flashed and sealed.

DU—DUCT SEAL AND INSULATION

DU 1.0—Introduction

To be eligible for the Duct Seal/Duct Insulation incentive, the existing insulation shall be R-2 or less. If the R-value of the existing duct insulation or flex duct is not clearly identified, R-2 shall be interpreted as 1" of duct insulation or less. Insulation installed on ducts in conditioned space is not eligible for Program incentives. Unfinished or partially unfinished basements that contain HVAC ducts or have a direct access to the interior conditioned space of a home shall be considered conditioned space.

To be considered a complete measure and eligible for incentives, duct insulation shall:

1. Comply with complete measure guidelines listed in section IN 1.0
2. Comply with carbon monoxide alarm guidelines listed in section DU 1.1
3. Provide homeowner *Care for Your Air: A Guide to Indoor Air Quality (EPA)*
4. Bring all accessible ductwork in unconditioned space into compliance with the applicable requirements listed in section DU

DU 1.1—Combustion Safety

Duct sealing can alter the performance of combustion appliances by reducing the amount of available combustion air and can create zones of increased negative pressure. A combustion appliance is any fuel-burning appliance including ovens, dryers, water heaters, and space heating systems that utilizes natural gas, propane, oil, kerosene, or wood. Duct sealing can cause increased concentrations of pollutants and humidity within the dwelling due to reduced natural air exchanges.

It is the responsibility of the Trade Ally to ensure that all combustion appliances contained within the confines of the structure are properly and safely vented, operating, and have suitable combustion air before and after duct sealing occurs and to ensure that all applicable state/local laws, codes, and standards are met and the indoor air quality of the dwelling is not compromised.

Homes with unvented combustion heating appliances are not eligible for duct sealing incentives.

A functioning and properly installed (in accordance with manufacturer's specifications) UL-listed carbon monoxide alarm is required when a combustion appliance is present within the confines of the structure when duct sealing is performed. Homeowners shall be made aware of the alarm and instructed how to operate, test, and maintain the alarm.

A combustion appliance zone (CAZ) is an enclosed area containing a combustion appliance for the purpose of space heating or water heating.

DU 1.2—Duct Sealing

All new and all accessible existing HVAC supply and return ducts, air handlers, and plenums outside the conditioned space shall be sealed at all joints and corners, including prefabricated joints. It is unnecessary to seal longitudinal seams unless they are damaged.

DU 1.2a—Duct Repair

Inferior sections of duct—such as rusted, crushed or disconnected sections or sections otherwise ineffective—shall be repaired or replaced before duct sealing is performed. When there are large gaps in sheet metal or duct connections, repairs shall be made using sheet metal, sheet metal screws, and/or mastic and mesh-reinforcing tape. Disconnected, loose-fitting or new metal ducts shall be secured using at least three sheet metal screws at each connection.

DU 1.2b—Duct Support

To minimize sagging, ducts shall be supported with durable supports. Flexible ducting supports shall be listed as UL-181 approved, be at least 1½" wide and not restrict airflow. Flexible ducting shall be supported within 3' of each connection to a hard duct. If possible, ducts shall be supported above the ground. When contact with the ground is unavoidable, closed-cell rigid insulation shall be placed under the ducts.

DU 1.2c—Duct-Sealing Materials

Ducts shall be sealed using pliable, water-based mastic labeled as meeting UL-181 standards. Gaps greater than ⅛" shall be reinforced using mesh-reinforcing tape before applying mastic. Boot-to-floor connections shall be sealed with caulking, pliable mastic or expanding foam. Foil or mastic HVAC tape labeled as meeting UL-181 standards may only be used on the air handler.

DU 1.2d—Duct-Sealing Opportunities

All accessible connections of the supply and return plenum and trunkline, and all accessible takeoffs, runs and boots—including the gores on adjustable elbows—shall be sealed with approved materials. The following target areas are listed in order of priority:

1. Plenum
2. Plenum-to-takeoff connections
3. Remove existing loose tape before applying mastic
4. Branch Ts, Ys and Ls
5. Add three screws to each duct connection
6. Duct-to-duct connections
7. Gores on adjustable elbows
8. Finger/dovetail joints
9. Boots
10. Boot-to-floor, boot-to-wall and boot-to-ceiling connections
11. Air-handler cabinet to return and base can

The presence of insulation alone shall not be considered a barrier to accessibility.
Loose tape shall be removed from rigid ducts prior to sealing. Secured tape shall be completely covered with mastic, which shall extend at least ½" beyond the tape edge on either side and be at least ⅛" thick.

DU 1.2e—Flexible Ductwork

All flexible ducts shall be joined to a section of rigid duct of matching diameter, including locations where two separate sections of flex duct meet. Both the inner and outer lining shall be tightly fastened using a compression strap tightened with a tool designed for that purpose. Tape may remain as long as a compression strap is installed to maintain a permanent connection. Flexible ducting shall be supported and comply with UL-181 requirements.

DU 1.3—Duct Insulation

All ducts in unconditioned areas shall be insulated to Program minimums. Special attention shall be paid to elbows and termination areas to ensure complete coverage. Do not pull the insulation too tight as this will compress it and decrease its R-value.

Do not insulate over flex ducts or preformed fiberglass duct board, and remove duct board insulation that is R-2 or less. Insulation shall be secured to ductwork every 12" with rot-proof twine, noncorrosive wire or manufacturer-approved vinyl tape if the insulation is vinyl-backed.

Duct insulation installed in basements, garages, storage areas or other human contact areas shall be covered to limit occupant exposure to insulation fibers (see section IN 1.7). Covering shall meet applicable fire codes.

Air conditioning ducts in unconditioned spaces should have a continuous Class I vapor retarder to avoid condensation if required by code.

DU 1.4—Manufactured Homes Duct Sealing

The definition of a manufactured home is "a structure, transportable in one or more sections" and "is built on a permanent chassis and designed to be used as a dwelling with or without a permanent foundation when connected to the required utilities, and includes the plumbing, heating, air conditioning, electrical systems contained therein" (source: Part 3280, Manufactured Home Construction and Safety Standards, Oct. 1994). For purposes of this specification, the definition of manufactured homes will also include older homes manufactured in factories and hauled over the road to the home site, and regulated by U.S. Department of Housing and Urban Development (HUD).

Where applicable, all ducts shall be installed, sealed, and supported in compliance with section DU.

Any portion of an HVAC duct that extends beyond the last register shall be blocked off and sealed.

The crossover ducts shall be installed to prevent compressions or sharp bends, minimize stress at the connections, avoid standing water, and avoid excessive duct lengths. When skirting is not present, the crossover duct shall be protected against rodents, pets, etc. Crossover ducts shall be secured with mechanical fasteners (e.g., stainless steel worm drive clamps, plastic/nylon straps applied with tightening tool, etc.) and sealed with mastic.
Where clearances permit, the crossover duct shall be supported above the ground by strapping or blocking. Min R-4, 1" foam board between duct and ground contact is permitted.

If a non-ducted return-air system is in the floor or ceiling cavity, it shall be eliminated. Seal all return-air openings in the floor or ceiling and seal the main return-air opening in the floor or ceiling of the furnace closet. Return air shall be provided through grills in the furnace closet to the conditioned space. These grills shall be adequately sized for the installed heating system. All interior doors shall be undercut, or other means provided, to allow return air to flow back to the furnace closet.

If the rodent barrier has been removed and batt insulation has been installed in the floor, all HVAC ducts, boots and plenums shall be sealed.

UN—UNDERFLOOR INSULATION: OVERVIEW

UN 1.0—Introduction

Underfloor weatherization measures include adding insulation, sealing floor penetrations, adding ventilation, installing a ground cover and adding water pipe insulation. Insulation shall be installed to reduce heat loss between conditioned space and unconditioned space or to the outside of the house.
To be considered a complete measure and eligible for incentives, floor insulation shall:

1. Comply with the complete measure guidelines listed in section IN 1.0
2. Be installed in an area of unconditioned space with an existing R-Value not exceeding Program maximums
3. Bring the connected accessible unconditioned space into compliance with the applicable requirements listed in Section UN (Refer to Illustrations UN 1.0a through UN 1.0d)

Only the area of the floor meeting the pre-existing insulation requirement is eligible for floor insulation incentives. The Program does not require that areas with existing floor insulation over the pre-existing requirement receive additional insulation or support techniques.

Situations where insulation has been contaminated by vermin or flood damage shall not be used for de-rating insulation R-Value.

Insulation installed on the exterior walls of a crawlspace or on the foundation walls of a basement is not eligible for incentives.

Insulation shall be installed so there is no air space between the insulation and the floor. Insulation that is not in continuous contact with the bottom of the subfloor is not eligible for incentives.

Refer to IN 1.11 for the Program's procedure for determining the R-Value of existing insulation.

Illustrations UN 1.0a through UN 1.0d provide guidance for installing incentive-eligible floor insulation in a variety of situations:

Illustration UN 1.0a

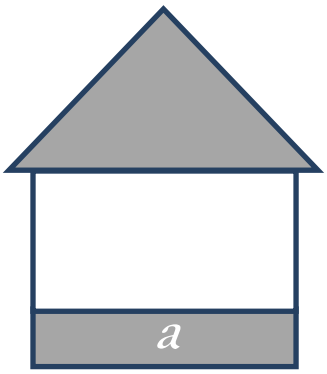

Illustration UN 1.0b

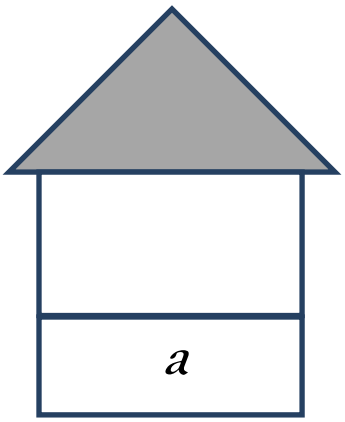

UN 1.0a: An unconditioned crawlspace under the entire living space. The entire crawlspace area "*a*" shall be brought into compliance with the requirements of Section UN.

UN 1.0b: A full conditioned basement. Conditioned basements are ineligible for floor insulation incentives. Refer to UN 2.8.

Illustration UN 1.0c

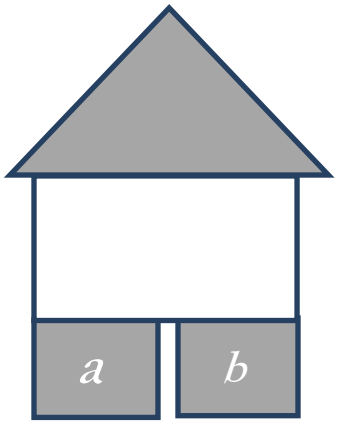

Illustration UN 1.0d

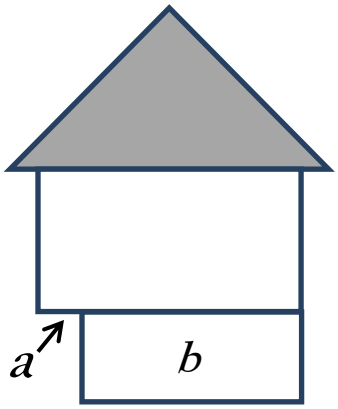

UN 1.0c: Two unconditioned crawlspaces physically separated from one another. Only the specific area where floor insulation is being installed—"*a*" or "*b*"—is required to comply with Section UN.

UN 1.0d: A cantilever (or overhang). Only area "*a*" is required to comply with Section UN.

UN 1.1—Underfloor Preparation and Debris

Degradable and absorbent scrap materials, especially wood and cardboard, shall be removed from the crawlspace. The underfloor shall be checked for water leaks and wood decay before and after work occurs. The homeowner shall be notified and corrective measures shall be taken, when necessary.

UN 1.2—Ventilation

Crawlspaces shall be ventilated by openings in exterior foundation walls. Such openings shall have a net area of at least 1 sq. ft. for each 150 sq. ft. of underfloor area. Where moisture due to climate and groundwater conditions is not considered excessive, the Program may allow operable louvers and the required net area of the vent opening to be reduced to 1/300 or less (minimum 1/1,500), provided the underfloor ground surface area is covered with an approved ground cover. Vent openings shall be reasonably secure to prevent the entry of vermin or other animals.

Openings shall be located as close to corners as practical and shall provide cross ventilation. The required area of such openings shall be equally distributed along the length of at least two opposite sides. Vents shall be covered with corrosion-resistant wire mesh, with mesh openings not to exceed ¼" in dimension. Existing vent openings covered with wire mesh need not be modified, except when modification is necessary to prevent the entry of vermin or other animals.

Crawlspace ventilation shall not be blocked by insulation or other material. Baffles shall be installed around ventilation that has been blocked to ensure proper airflow. Where venting cannot be reasonably added except by breaching a foundation, ventilation requirements shall be waived.

If continuously operated mechanical exhaust ventilation is provided at a rate of 1.0 CFM per 50 ft^2 of floor area, ventilation openings may be omitted.

UN 1.3—Ground Covers

All crawlspaces require a ground cover. All ground covers shall be a minimum of six-mil black polyethylene. If an existing ground cover does not meet these specifications, it shall be repaired, or a new ground cover shall be installed. All seams shall be lapped at least 12". The cover shall be continuous, with no rips, tears or gaps. Exposed soil or earth in a basement shall comply.

UN 1.4—Sealing Floor Penetrations

To prevent transmission of water vapor and to support the effective R-Value of the underfloor insulation, all floor penetrations shall be sealed, including plumbing, wiring and duct penetrations, floor transitions, and similar openings in the air barrier of the underfloor. Caulk, foam or other compatible sealants shall be used.

Open chases around chimneys that extend into the crawlspace shall be sealed using fire-rated materials. Spans greater than ¾" shall be bridged using sheet metal and ASTM E-136 rated caulk within 3" of masonry chimneys and flues.

Bathtub/shower drain accesses shall be sealed. If the drain trap is above the level of the floor, provisions to maintain accessibility for maintenance shall occur.

Illustration UN 1.4

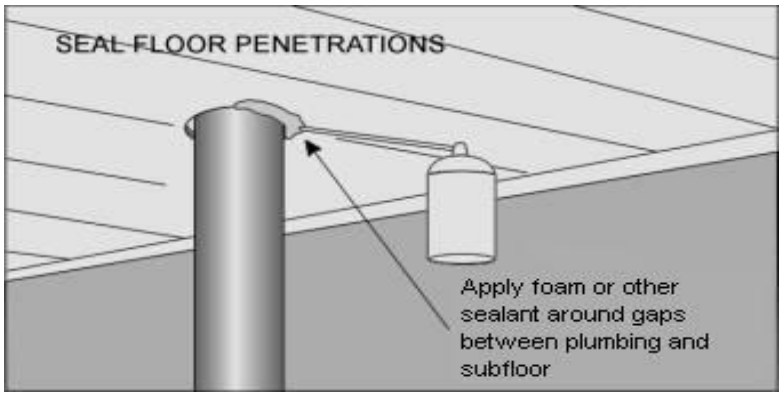

UN 1.5—Floors Above Other Unconditioned Areas

If the ceiling of a garage, service area, storage area or other unconditioned space (not including basements) serves as the floor of a conditioned space above, this ceiling may be insulated to obtain a floor insulation incentive. Existing conditions shall comply with current Program standards for floor insulation, and the measure shall meet all the relevant requirements in Section UN.

UN 1.6—Rim Joist Insulation

In conditioned basements, the sill plate and each joist bay shall be sealed for air leaks before installing insulation. Gaps between the sill plate and foundation wall shall also be sealed for air leaks. Batt-type or foam insulation used in this application shall be tightly installed, securely fastened, and at least R-15, and shall comply with applicable state and local jurisdictional codes. A human contact barrier shall be installed over batt-type insulation. Foam insulation used to insulate rim joists shall comply with applicable requirements in Section IN 1.4.

UN—UNDERFLOOR INSULATION: INSTALLATION

UN 2.0—General Installation Requirements

Floor insulation shall be in contact with the floor. Use of unfaced batt-type insulation is acceptable. There shall only be one vapor retarder in the assembly, and it shall be in direct contact with the subfloor and face the conditioned space of the home.

Kraft facing, commonly attached to batt-type insulation, is a vapor retarder. If kraft facing is attached, it shall be in contact with the conditioned floor of the home.

Slight compression of insulation is acceptable to maintain continuous contact with the bottom of the floor. Insulation shall be in continuous contact with the floor and fill the entire cavity depth, from the bottom of the subfloor to the bottom of the joist or beam. Insulation shall also be in contact with the joists that frame the cavity. The batt insulation installed into joist cavities shall be slightly wider than the cavity in order to fill the cavity and fit the insulation more securely in place.

Insulation shall not be compressed into framing cavities not meeting manufacturers recommended thicknesses, therefore 9.25" cavity thickness is required for standard density R-30 fiberglass batting. Floor cavities with less than a 9.25" cavity thickness can still qualify provided the framing or insulation support material is furred down or other insulation materials or techniques (or combination of) are used that have a higher R-value per inch, e.g., mineral wool batts, net and blow, spray foam, or rigid foam board. Foam insulation shall comply with applicable requirements in Section IN 1.4. R-30 high density fiberglass batts installed in a 7.25" cavity do not meet the intent of this specification.

Insulation installed into a joist cavity taller than 10" shall maintain continuous contact with the floor and meet all other relevant specifications outlined in Section UN.

Illustration UN 2.0a

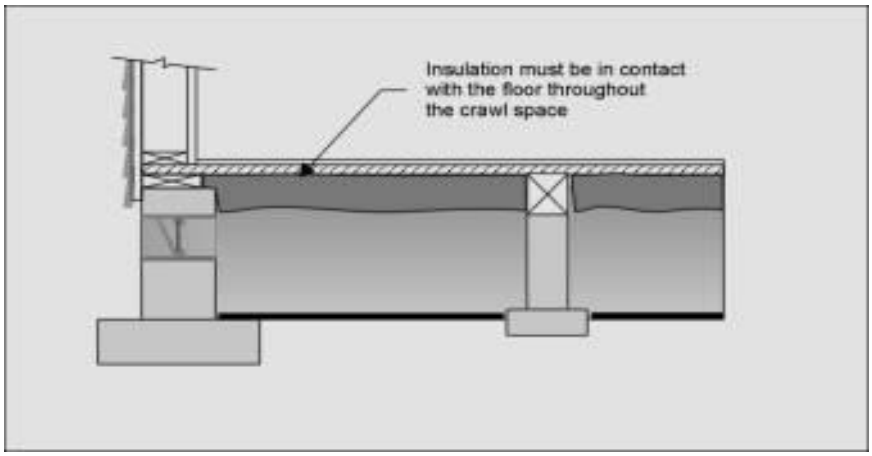

Insulation shall be pulled free from any temporary stapling. Insulation shall be cut to fit without gaps or overlaps. There shall be no gaps at the perimeter of the foundation.

Illustration UN 2.0b

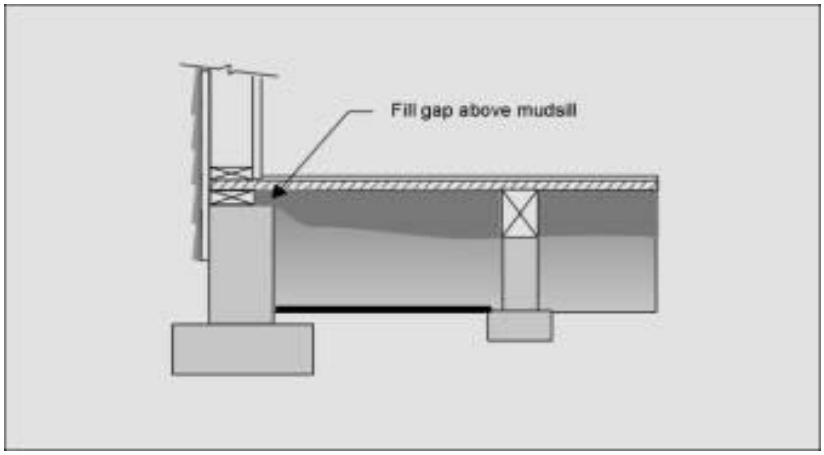

Insulation shall be supported so it does not block or restrict crawlspace ventilation. If necessary, insulation may be compressed to meet this requirement.

UN 2.1—Floor Insulation Support Materials

Use one of the following materials to support floor insulation:

Wood lath—Wood lath shall be a minimum of ¼" x 1"
Twine—Twine shall be non-stretching polypropylene or polyester
Wire—Wire shall be stainless steel, copper or an equivalent material of similar corrosion resistance, with a minimum diameter of 0.04" (size 18 AWG). Self-supporting wire hangers are not acceptable.

Hand stapling is not a durable fastening technique and will not qualify a project for a Program incentives.

Fasteners for lath, twine or wire may be one of the following: hot-dipped galvanized nails, screws or corrosion-resistant staples that are at least 18 gauge and long enough to penetrate wood at least ⅝".

Illustration UN 2.1

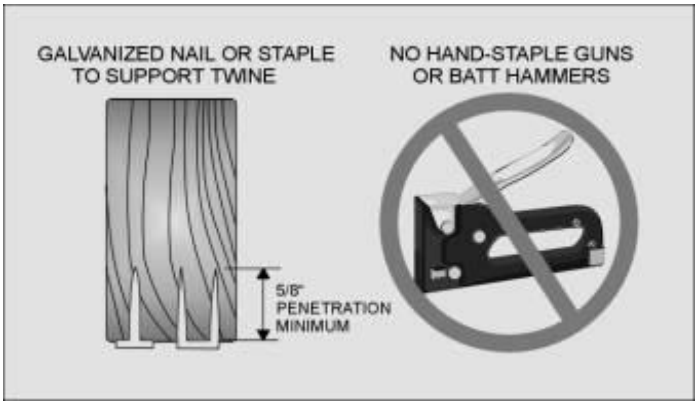

UN 2.2—Spacing Requirements for Support Systems

Staples shall be driven with a power-actuated stapler to achieve at least ⅝" penetration. The maximum spacing for support systems is as follows:

Table UN 2.2

Spans	Maximum Spacing
24" or less	18" apart
48"	12" apart
60"	8" apart
72"	6" apart

Wood lath shall not be used for spans greater than 48". Splicing does not meet this requirement. Wood with a thicker dimension may be used for wider spans.

Support systems for spans greater than 72" or support systems not secured to the bottom of the joists require prior approval by the Program.

Batt-type insulation shall be supported no more than 3" from the ends. This support shall be parallel to the end of the batt. Small pieces of insulation shall be supported.

Illustration UN 2.2

SKIPPING JOISTS

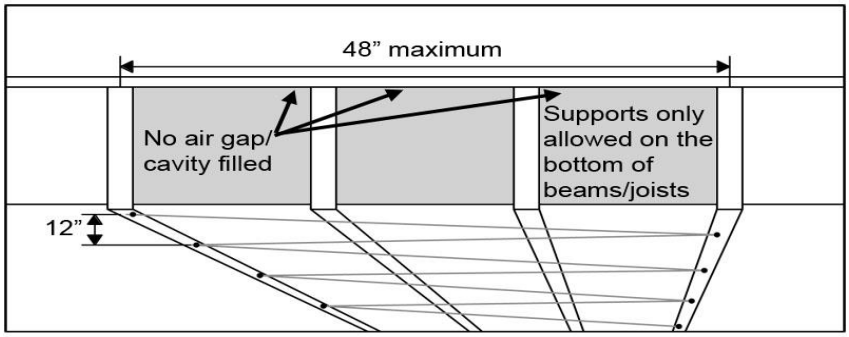

Up to 16" joist space, staple 12" apart. Skip 1 or 2 joists up to 48" max.

Insulation shall be supported so that it is in direct contact with the bottom of the subfloor sheathing.

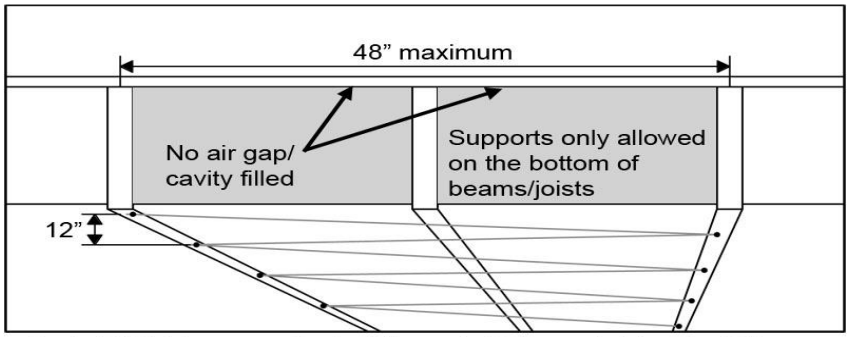

Up to 24" joist space, staple 12" apart. Skip one joist up to 48" max.

Support systems shall be fastened to the underside of floor joists. Joists may be skipped; however, the maximum spacing shall not exceed 12". The maximum span of skipped joists shall not exceed 48".

UN 2.3—Water Pipe Insulation

All hot and cold water pipes not enclosed within the floor insulation shall be insulated to a minimum of R-3. Leaking water pipes shall be repaired before insulating them.

All water pipe insulation shall be secured with twine, corrosion-resistant wire or plastic compression ties. Tape is not allowed to secure water pipe insulation. Do not cover the handles and spigots of safety drain valves with insulation.

Fiberglass insulation shall have a minimum finished thickness of 1", be in continuous contact with the water pipe, and be secured every 12". Insulation shall be secured to the beam at a minimum of every 12" when water pipes run next to a beam or joist.

Preformed insulation shall be properly sized. Corners shall be mitered to fit tightly. The inside diameter of the preformed insulation shall match the outside diameter of the water pipes. Preformed insulation shall be supported every 24" and within 3" of the ends. If connections and corners are larger than piping, exposed joints shall be insulated with fiberglass or

preformed insulation equal to the outside diameter of the connection and corners.

UN 2.4—Inside Access Doors for Underfloors

All operable accesses between unconditioned and conditioned spaces shall be insulated to R-25 for floor hatches and R-15 for doors in walls. Insulation shall be securely fastened to access doors using staples and twine or a similar method that ensures the effectiveness and durability of the insulation. Inside access doors shall be weatherstripped.

Illustration UN 2.4

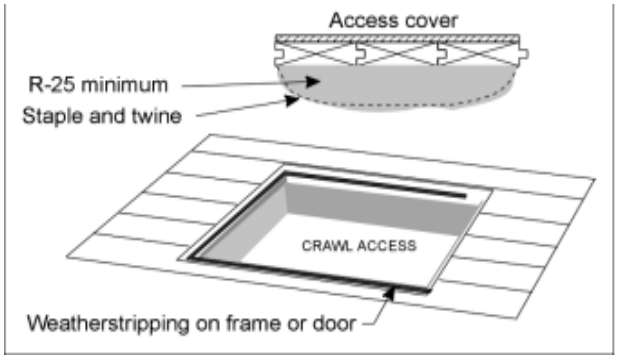

Alternatively, R-5 or greater rigid insulation installed between the access cover and a rigid protective material (OSB, plywood or other durable rigid material) is allowed. Insulation shall be sealed around the perimeter to the access cover using caulk, adhesive or spray foam. The rigid protective material shall be mechanically attached to the access cover to securely hold insulation in place. The access cover assembly shall be tightly sealed using weatherstripping around the entire perimeter.

All operable accesses shall remain operable unless an access is sealed off in favor of another existing access or a newly created one. Work performed in an inaccessible area that will remain inaccessible after completion shall be documented with photographs detailing the measure's compliance with relevant specifications.

UN 2.5—Outside Access Doors for Underfloors

Any outside access shall have a door that is easily opened to permit inspection and shall be weather and vermin-resistant. A vertical access may be screened when it is part of the crawlspace ventilation system. Horizontal hatch covers shall shed water. Wood in contact with soil or concrete shall be pressure treated.

Existing covers are acceptable if they are in good condition and are weather and vermin-resistant.

UN 2.6—Dryer Exhaust

Dryer exhaust ducts shall be vented to the exterior of the structure, be sealed to prevent exhaust air from entering the building, have a damper, and terminate in a code-approved vent cap. New dryer ducts shall be rigid metal, securely connected with mechanical fasteners and permanently supported. Exhaust systems shall comply with local code and

manufacturer specifications, be as straight as practical, and not exceed 25'. To prevent blockage with lint, dryer vent ducts shall not be connected with screws. A metal clamp or UL-rated foil tape may be used to secure dryer duct connections.

UN 2.7—Downdraft Exhaust Ducts

Downdraft exhaust ducts may have a 90-degree turn and shall exit through the foundation or exterior wall, be sealed (with no visible gaps) to prevent exhaust air from entering back into the building, and end in a code-approved vent cap.

UN 2.8—Vertical Walls in Underfloor Spaces

Uninsulated walls between conditioned and unconditioned spaces in the underfloor area shall be sealed for air leaks, insulated to a minimum of R-15 and create a continuous thermal envelope. The floor cavities between joists that connect adjacent conditioned space to unconditioned space shall be sealed with a rigid air barrier. When no wall exists, one that extends to the bottom of the subfloor shall be constructed and an effective pressure and thermal boundary shall be installed.

UN 2.9—Installing Foam Insulation

Spray foam insulation may be used for insulating and air sealing an underfloor area either on its own or in combination with other insulation types (such as flash and batt). This assembly shall meet the requirements for R-Value, be in contact with the conditioned surface, comply with manufacturer specifications, and comply with the thermal and ignition barrier requirements for foam plastics as defined by the prevailing jurisdictional building code. There shall be no gaps or voids in the insulation assembly and all other applicable underfloor specifications shall be met.

Spray foam is exempt from support requirements. When used in combination with other insulation types, spray foam shall be installed in contact with the conditioned surface of the home.

When installing foam-insulation products, the manufacturer's name, product identification and information to determine the end use shall be left with the homeowner and presented to Program representative for review during the QA process. Refer to IN 1.4 for further requirements for foam insulation.

UN 2.10—Miscellaneous Underfloor Specifications

Underfloor areas that allow easy human access shall comply with the requirements defined in IN 1.7 to protect occupants from encountering fibrous insulation in areas where routine storage or maintenance occurs.

An air barrier or skirting shall protect underfloor insulation exposed to the wind, including unskirted crawlspaces and cantilever floors.

Unconditioned unvented basements with concrete floors and walls do not require a ground cover, foundation vents or water pipe insulation, except for pipes located on exterior walls. Unconditioned vented basements with concrete floors and walls do not require a ground cover, but water pipes shall be insulated according to UN 2.3.

Basements with exposed soil or earth shall have a ground cover installed on exposed areas.

If standing water is found in the crawlspace, it must be drained before the floor can be insulated. A sump pump may be needed for some situations. Draining the water is the responsibility of the homeowner.

Before installing insulation in contact with active knob and tube wiring, the electrical system shall be inspected and the homeowner shall receive written approval by a licensed electrician. Insulating floors with knob and tube wiring shall be at the discretion of the contractor and homeowner and adhere to state and local code.

UN—UNDERFLOOR INSULATION: MANUFACTURED HOMES

UN 3.0—Introduction

The definition of a manufactured home is "a structure, transportable in one or more sections" and "is built on a permanent chassis and designed to be used as a dwelling with or without a permanent foundation when connected to the required utilities, and includes the plumbing, heating, air conditioning, electrical systems contained therein" (source: Part 3280, Manufactured Home Construction and Safety Standards, Oct. 1994). For purposes of this specification, the definition of manufactured homes will also include older homes manufactured in factories and hauled over the road to the home site, and regulated by U.S. Department of Housing and Urban Development (HUD).

Floor insulation in manufactured homes must comply with applicable requirements listed in section UN with the following requirements specific to this type of housing stock.

If the existing R-Value of the floor cannot be verified, a default R-Value may be used unless an actual value can be observed during weatherization work. Refer to Appendix B.

Note: The Program does not provide incentives for the cost of removing or replacing an existing belly board. State or local code may require belly boards on manufactured homes.

Illustration UN 3.0

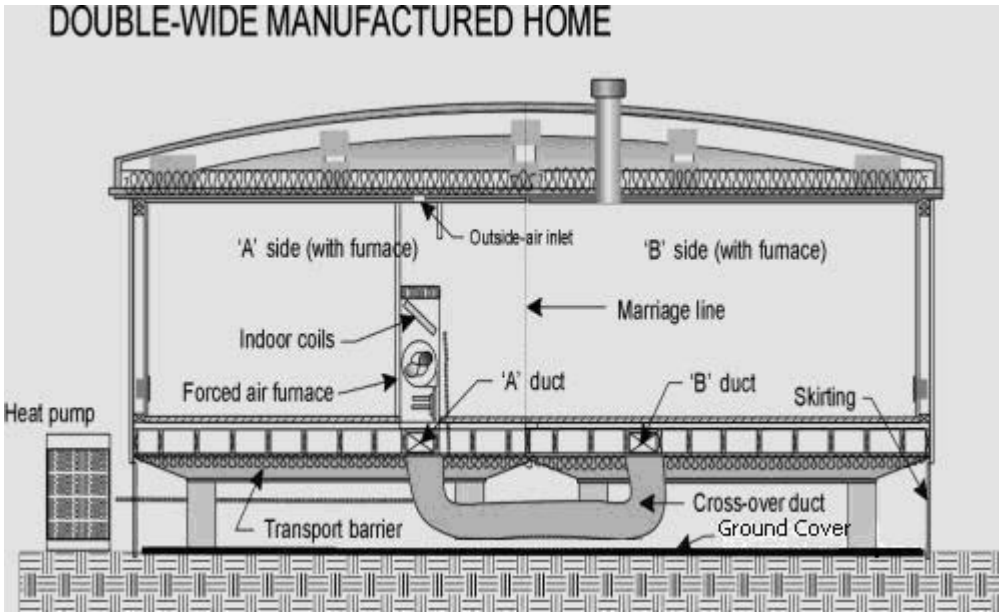

UN 3.1—Preparation

Belly board or belly wrap shall be repaired to prevent insulation from falling from floor cavity. Repair materials shall be stitch stapled to the belly board or otherwise permanently affixed. Plumbing leaks shall be repaired and decayed wood flooring shall be replaced.

All plumbing penetrations through the floor (e.g., bathtubs, clothes washers, sinks, etc.) shall be sealed before underfloor insulation is installed.

Illustration UN 3.1

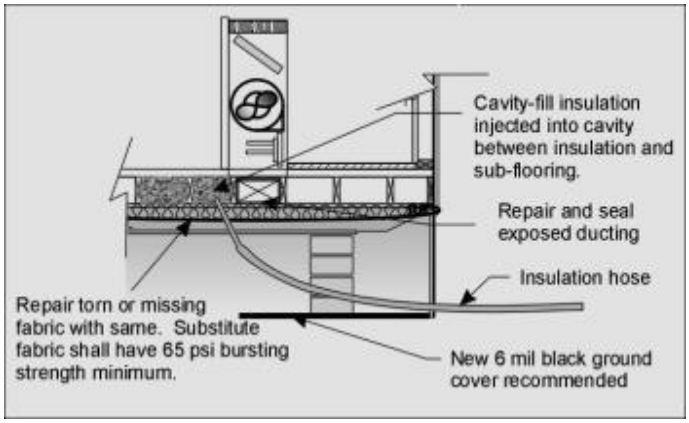

UN 3.2—Materials

Materials used to patch the belly board shall be breathable, durable and capable of supporting the insulation. Expanding foam or other sealants shall be used to seal accessible floor penetrations.

UN 3.3—Installation

Underfloor cavities shall be insulated either by drilling small holes in the belly board or by drilling through the rim joists perpendicular to the floor joists. If holes are drilled through the belly board, they shall be patched. Holes drilled in the rim joists shall be patched with wooden plugs.

The entire floor cavity shall be packed with insulation to achieve Program minimum R-Values.

Illustration UN 3.3

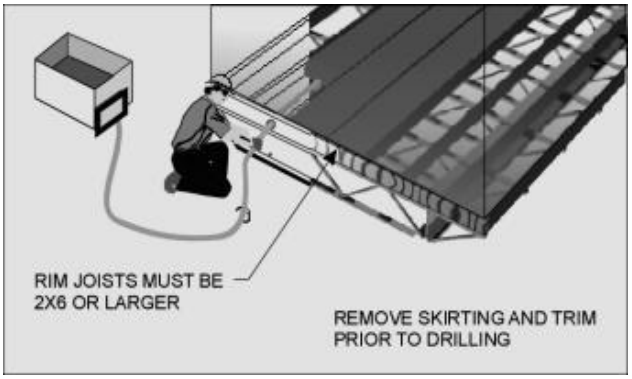

WA—WALL INSULATION

WA 1.0—Introduction

This section applies to exterior walls and buffered walls adjacent to unconditioned areas, such as garages. Insulation shall be installed to reduce heat loss between conditioned and unconditioned spaces or to the outside of the house. Basement walls, conditioned crawlspace walls, and below grade walls do not qualify.

To be eligible for an incentive, the existing wall insulation shall not exceed pre-existing Program limits, and **all cavities in all exterior walls** shall be insulated to Program minimums or completely filled.

To be considered a complete measure and eligible for incentives, wall insulation shall:

1. Bring all accessible wall areas that are eligible for incentives to the R-Value specified by current Program qualifications (refer to IN 1.0)
2. Bring the accessible wall areas affected by the insulation project into compliance with the applicable requirements listed in Section WA

WA 1.1—Knob and Tube Wiring

Refer to IN 1.2 for Program requirements regarding knob and tube wiring.
Enclosed wall cavities with active knob and tube wiring may be left uninsulated as long as this area is equal to or less than 10 percent of the total uninsulated exterior wall area of the conditioned space. This area shall not be eligible for incentives.

WA 1.2—Insulating Closed Walls

This subsection refers to exterior walls and buffered walls adjacent to unconditioned areas, such as garages. Refer to AT 1.13 for Program requirements for buffered walls adjacent to attics. All cavities in all walls shall be filled, including small cavities above, below and to the side of windows and doors. Use of an infrared camera is strongly encouraged to identify such cavities, and due diligence shall be applied to ensure a consistent level of insulation.

Insulation shall not be installed in wall cavities that serve as air ducts for heating or cooling. Cavities containing wall-mounted heaters shall not be insulated unless there is blocking to prevent contact with insulation. Cavities containing fuse or breaker boxes shall not be insulated without the homeowner's consent. Only non-combustible insulation (per ASTM E-136) shall be installed in wall cavities adjoining fireplaces and/or chimneys.

WA 1.3—Plugs and Finish Work

Plugs shall be sealed, weatherproofed and ready to paint. Plugs shall not be vented. Plugs shall be made of material that will not shrink or expand, which would result in damage to the siding or finish. If the surface of the plug is below the surface of the siding, the hole shall be filled with non-shrinking, waterproof filler. If siding is removed and holes are drilled in the sub-siding, the holes shall be plugged.

WA 1.4—Removing and Replacing Siding

Before replacing siding, holes shall be filled with fitted plugs, covered with tar paper, counter flashed, and stapled. Shingles or shakes shall be nailed every 4" with a minimum 4d galvanized finish nail and at each corner. Clapboard-type siding shall be nailed at every wall stud or 16" on center. All replaced siding shall use galvanized or corrosion-resistant nails and be reinstalled in a professional manner. Any raw wood shall be primed or sealed.

WA 1.5—Open Wall

Open walls that separate conditioned and unconditioned spaces, such as garages adjacent to a conditioned space, shall be sealed for air leakage, insulated to Program minimums (or the cavity shall be filled), and covered with a vapor-permeable air barrier to limit human contact in compliance with the requirements of AT 2.6. See IN 1.8 for the eligibility requirements for homes without intact interior wall coverings.

WA 1.6—Interior Installations

Walls that are inaccessible from the exterior shall be filled from the interior, with the homeowner's permission.

WI—WINDOWS AND SLIDING GLASS DOORS

WI 1.0—Introduction

Window requirements shall also apply to sliding glass doors unless otherwise stated. Windows shall be installed and supported according to the manufacturer's specifications and in compliance with prevailing jurisdictional code. If window-weight cavities exist and are accessible, the weights shall be removed and the cavity shall be filled with insulation. Windows shall be reasonably sealed to prevent air infiltration. All incentive-qualifying windows shall meet the applicable requirements—unless a waiver is approved in advanced by the Program (see IN 1.5)—to be considered a complete measure. Windows shall be installed to prevent heat loss from a conditioned space to the outside of the house. Basements that are heated, contain heating equipment (including ducts) or have a direct access to the interior conditioned space of a home shall be considered conditioned space for the purpose of window incentive qualification.

Overview for all glazing systems:

1. Safety glazing shall be used where required by current state code. See subsections about safety glass for details.
2. Windows shall operate smoothly and safely.
3. Screens shall be furnished with all operable windows.
4. Exterior wood, including the frame, sash, trim, stops and sills, shall be at a minimum primed and ready for paint.
5. Hardware and fasteners shall be aluminum, stainless steel, galvanized or other corrosion-resistant material.
6. Any exterior seam/gap connected to the window, trim, or rough opening that could potentially allow the passage of bulk moisture into the building cavity or behind the weather-resistant barrier shall be sealed with an elastomeric sealant that complies with the requirements listed in WI 1.2.
7. Gaps between the exterior siding and the window that are greater than ⅜" shall be covered with solid trim material. Exterior or interior voids more than ⅜" deep or wide shall be filled with window manufacturer-approved materials, such as backer rod, nonexpanding foam or a similar product prior to caulking, if caulking will be applied.
8. Weep holes shall be left clear and unobstructed to allow for proper drainage.

Window incentives shall be paid only for replacement windows equal in dimension to or smaller than the original rough opening. Enlarged windows and those installed where no window previously existed are not eligible for Program incentives, except when the window area is increased to meet egress requirements.

Windows shall be installed to meet these specifications unless federal, state or local jurisdictional codes exceed these specifications. In cases where the requirements of this section conflict with the manufacturer's installation guidelines, installers shall defer to the window manufacturer's guidelines and inform the Program of the inability to meet specifications before submitting an incentive application.

Pieces of exterior siding that have been removed and replaced, or otherwise affected by window installation, shall be made weather-resistant upon reinstallation. Any seams opening to the internal weather barrier, sheathing or wall cavity shall be sealed, except for butt joints of fiber cement siding, which may be left unsealed so long as a secondary weather-

resistant barrier is present under the siding. Any newly exposed bare wood shall be primed and ready for paint or painted.

Windows shall be installed between conditioned and unconditioned space. Windows installed between unconditioned garages and the exterior of the house are not eligible for Program incentives.

WI 1.1—General Requirements for Glazing

Replacement windows shall be certified and labeled for U-Value in accordance with the simulation, testing and certification procedures of the National Fenestration Rating Council Incorporated (NFRC).

WI 1.2—General Requirements for External Sealants

External elastomeric sealants, such as caulking, shall be installed in accordance with the sealant manufacturer's recommendations. Sealants shall be selected for good adherence to all contacted building materials except backing material and be applied only to clean, dry and oil-free surfaces. Caulking may be applied to joints, seams, gaps or other openings, but shall not be used as a paint to cover exposed wood or other features.

The following window types are common for retrofits. For windows not meeting these descriptions, contact the Program for information about qualifying installations.

WI 1.3—Insert Windows

The Program defines "insert window" as any window that does not have nailing flanges, including windows commonly termed "block windows" and "flush fin windows." If an insert window is installed to replace an existing flanged window, the existing window shall be removed in a way that does not damage the weather-resistant barrier. Insert windows shall be secured to the rough opening within 4" of each side corner and a minimum 12" on center thereafter. Insert windows shall be sized as close to the measurements of the interior jamb as reasonably possible. Gaps more than ⅜" wide between the exterior siding and the insert window shall be trimmed. Exterior or interior voids more than ⅜" deep or wide shall be filled with backer rod prior to caulking. The flashing shall tuck behind the exterior siding at least 1". Insert windows shall be supported at the fin line.

WI 1.4—Surface-Mounted Windows

The Program does not allow surface-mounted windows on site-built houses or on manufactured homes with wood siding. This subsection does not apply to stucco-mounted windows. Surface-mounted windows designed for this purpose may be installed on manufactured homes with aluminum siding, provided that the siding is cut back to allow the window to be integrated with the weather-resistant barrier.

WI 1.5—Flanged Windows

Flanged windows have nailing flanges and are installed on the sheathing or framing. The tops of all flanged windows shall have Z-style rigid flashing, known as a drip cap, inserted behind the weather barrier and over the head trim piece, unless the tops of the windows are protected by an overhang (see Illustration WI 1.6—Exposed to the Elements). Drip

caps feature a pronounced lip that slopes gently down toward the exterior. The front edge of a drip cap shall have a downward bending lip of at least ¼" (see Illustration WI 1.5).

Illustration WI 1.5:

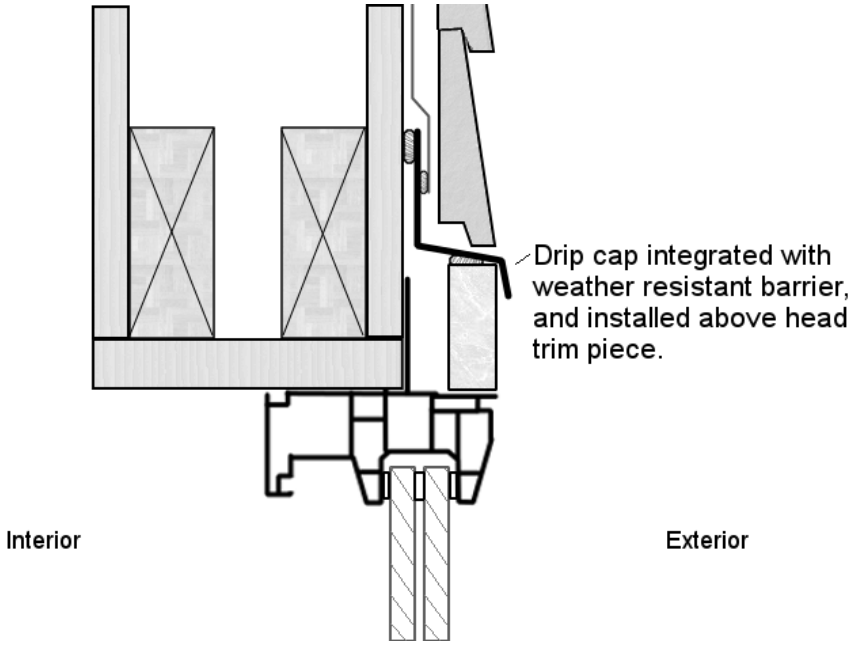

The sides of flanged windows shall be flashed with 15-pound felt or an equivalent manufacturer-recommended flashing material. The flashing material shall be inserted underneath the existing siding and building paper and over the fins of the windows.

The tops of flanged windows shall be flashed with 15-pound felt or an equivalent manufacturer-recommended flashing material. The flashing material shall be inserted underneath the existing siding and building paper and over the top fin of the windows.

The bottoms of flanged windows shall be flashed with 15-pound felt or an equivalent manufacturer-recommended flashing material. The flashing material shall be inserted underneath the existing siding, over existing building paper and under the bottom fins of the windows.

All filler, trim and adjacent siding shall be thoroughly caulked. The flashing shall tuck behind the exterior siding at least 1".

WI 1.6—Exposed to the Elements

To determine if a window is exposed to the elements, use the two-to-one ratio system. See the following illustration:

Illustration WI 1.6

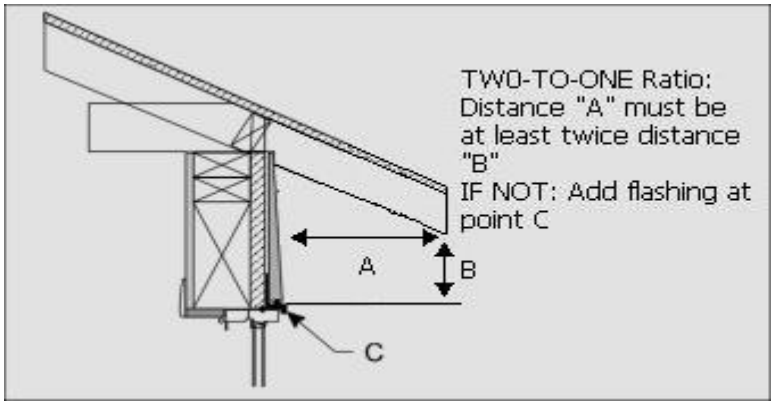

WI 1.7—Stucco-Mounted Windows

Stucco-mounted windows are replacement windows that mount directly to the frames of existing windows.

The fin of the new window shall be sealed to the outer flange of the existing window with a sealant designed for this purpose. The lip of the existing aluminum flange shall be at least ⅜" wide. The gap between the frame of the replacement window and the interior trim shall be caulked. If the gap exceeds ¼", the gap shall be filled with window manufacturer-approved materials, such as backer rod, nonexpanding foam or a similar product, prior to caulking, if caulking will be applied. The gap shall then be covered with a permanently attached trim material and caulked on the top and bottom seams.

The bottom rail of the existing window shall be cleaned to prevent blockage of weep holes. The miter joints on the fin of the replacement window shall be smooth so the corners do not bulge from the aluminum window.

WI 1.8—Miscellaneous Requirements

The bottom rail of a sliding glass door shall be firmly supported within ½" of the exterior edge of the frame.
Any wood touching the ground or cement shall be pressure treated.

WI 1.9—Health and Safety Requirements

All windows shall meet the following egress and safety-glazing specifications. Installers are required to meet current state or local code if it is more restrictive than the Program specifications.

Any casement, awning or other window that may be opened by the application of force away from or into the structure and that is installed above the first full story shall have a manufacturer-provided window opening control device for child fall protection. The device must prohibit the passage of a rigid sphere 4" in diameter and, when used for egress, must be fitted with a quick release mechanism as mentioned in WI 1.11.

WI 1.10—General Safety Glazing Requirements

Refer to all applicable federal, national, regional, state and local codes or regulations to determine window locations requiring safety glazing.

WI 1.11—Emergency Egress Openings

Refer to all applicable federal, national, regional, state and local codes or regulations to determine requirements regarding egress openings.

PART 2: MECHANICAL SYSTEMS

This section covers technical specifications required when installing HVAC and plumbing equipment for program incentives.

To be considered a complete measure and eligible for incentives, mechanical installations shall:

1. Comply with the complete measure guidelines listed in section IN 1.0
2. Comply with requirements regarding code compliance and manufacturer's specifications as outlined in IN 1.1 and 1.12.

CAC—CENTRAL AIR CONDITIONER

CAC 1.0—Introduction

This section governs installation requirements for ducted and ductless heat pump systems and central air conditioners. Refer to IN 1.2, IN 1.3, IN 1.14, IN 1.15 and IN 1.16 for additional requirements.

The contractor shall ensure evaporators and condensing units are compatible with one another according to AHRI specifications.

Refer to Appendix D for additional best practices regarding ducted and ductless heat pump systems.

CAC 1.1—Thermostat

A programmable thermostat with the ability to program a temperature setback shall be installed. The temperature setback shall be no more than 3 degrees Fahrenheit to maximize energy-efficient operation.

CAC 1.2—Line Set Requirements

Line set penetrations through the building shell shall be sealed.

Outdoor portions of the line set shall be protected with a mechanically secured rigid covering. In situations where installation of a rigid cover is impractical, a securely fastened UV-resistant covering may be used to protect the line set.

The line set shall be insulated over its entire length. For central air conditioners, the liquid line may be uninsulated.

CAC 1.3—Outdoor Unit Installation

The outdoor unit shall rest on a permanent pad on a stable, level surface.

The outdoor unit shall not be covered with debris or have obstacles nearby that restrict or prevent airflow over the unit.

DHP—DUCTLESS HEAT PUMP

DHP 1.0—General Requirements

Ductless heat pumps shall be installed in accordance with the requirements listed in HP BP 1.0, HP BP 1.2 and HP BP 1.3 and according to the following.

DHP 1.1—Outdoor Unit Installation

Set outdoor unit on a pad placed on a stable, level surface; secure unit to pad using bolts and/or adhesive. In lieu of pad mounting, the outdoor unit may be wall mounted using hardware designed specifically for this purpose and installed per the manufacturer's instructions and recommendations. If using wall-mount brackets, use vibration mounts to prevent noise concerns.

In cold climates, elevate the unit to maximize clearance under the outdoor unit for easy drainage and reduced snow and ice buildup.

New tubing flares shall be created and connected with the R410A nuts (supplied with your indoor and outdoor unit). Flare nuts provided by the tubing manufacturer shall not be used.

DHP 1.2—Indoor Unit Installation

The indoor unit shall be securely mounted, level and plumb per the manufacturer's specifications to a permanent surface (wall, soffit, partition, etc.). Mounting to movable walls or partitions is not allowed.

Condensate drain should slope downhill and run to a suitable termination point away from crawlspaces and walkways. Condensate pumps shall not be used unless no other reasonable solution for adequate drainage is feasible.

ECM—GAS FURNACE WITH ELECTRICALLY COMMUTATED MOTOR (ECM)

ECM 1.0—General Requirements

Combined supply and return static pressure needs to be between .35 to .65 WCI (87-162 Pascal) on the highest heating or cooling fan speed setting upon installation.

All physically accessible ducts should be firmly connected and duct connections at the furnace must be sealed.

GEO—GROUND SOURCE HEAT PUMP

GEO 1.0—General Requirements

Systems should be designed and installed according to the International Ground Source Heat Pump Association (IGSHPA) guidelines (http://www.igshpa.okstate.edu), manufacturer recommendations, and all local, state, and federal laws and ordinances.

ENERGY STAR-rated COP shall be compliant with the most up-to-date version of the ENERGY STAR Specifications for the system being installed. http://www.energystar.gov/index.cfm?c=geo_heat.pr_crit_geo_heat_pumps

Systems should be sized to meet no less than 100% of the design heating load.

All system components, including the ground loop, shall be warranted for a period of no less than 5 years.

System should be certified as a "PTCS Commissioned Heat Pump" and be documented using the PTCS Ground Source Heat Pump Form. http://www.bpa.gov/EE/Sectors/Residential/Documents/PTCS_GSHP_Form_2015.pdf.

Installations shall meet sections 4 and 5 (Auxiliary Heat Sizing and Auxiliary Heat Control) and section 10 (Air Flow) of the "Performance Tested Comfort Systems – Air Source Heat Pump System Installation Specification". http://www.bpa.gov/EE/Sectors/Residential/Documents/ASHP_Specifications_2013.pdf

HP BP—HEAT PUMP WITH BEST PRACTICES AND INSTALLATION

HP BP 1.0—Introduction

This section governs installation requirements for ducted and ductless heat pump systems. Refer to IN 1.1, IN 1.10, IN 1.12, and IN 1.13 for additional requirements.

The contractor shall ensure evaporators and condensing units are compatible with one another according to AHRI specifications.

HP BP 1.1—Thermostat

A programmable thermostat with the ability to program a temperature setback shall be installed. The temperature setback shall be no more than 3 degrees Fahrenheit to maximize energy-efficient operation.

The balance point shall be within 5 degrees (plus or minus) of 30°F.

HP BP1.2—Line Set Requirements

Line set penetrations through the building shell shall be sealed.

Outdoor portions of the line set shall be protected with a mechanically secured rigid covering. In situations where installation of a rigid cover is impractical, a securely fastened UV-resistant covering may be used to protect the line set.

The line set shall be insulated over its entire length. For ducted heat pumps only, the liquid line may be uninsulated.

HP BP1.3—Outdoor Unit Installation

The outdoor unit shall rest on a permanent pad on a stable, level surface.

The outdoor unit shall not be covered with debris or have obstacles nearby that restrict or prevent airflow over the unit.

HP BP 1.4—Air Flow Test

Air flow shall be tested after installation preferably using a TrueFlow Air Handler Flow Meter™. The Energy Conservatory™ Flow Conversion and Flow Resistance Correction Factors are available in Appendix E and F.

Alternatively, checking return air static, supply air static, and total static pressures and comparing to the Static Pressure Air Flow Chart can be done. Refer to Appendix G.

Other methodology may be used with Program pre-approval.

Air flow across the coil shall be 350 CFM/ton or greater, tested at the highest heating or cooling capacity.

HP BP 1.5—Refrigerant Charge Performance Check

Refrigerant charge can be checked by either measuring subcooling **OR** by a temperature split check depending on outdoor temperature:

Subcooling Test

- Test with unit in cooling mode when outdoor temperature is 65° F or higher
- Run unit for at least 15 minutes before taking reading
- Confirm measured sub-cooling is within +/- 3˚F of manufacturer's target value
- Alternatively, confirm approach temperature matches manufacturer's target value

Temperature split

- Test with unit in heating mode when outdoor temperature is below 65° F
- Confirm measured temperature split is equal to or exceeds expected values in Heat Pump Temperature Split Chart. Refer to Appendix H

HP BP 1.6—Lockout Controls

Heat pump installations shall use control strategies that minimize unnecessary use of auxiliary heat. In all systems, auxiliary heat shall not operate during a first stage heating call (unless system is switched to emergency heat.) Controls shall be in place so that auxiliary heat will not be engaged if the outdoor temperature is above 35°F, unless supplemental heating is required for defrost cycle or for emergency heating.

HP BP 1.7—Sizing

Manual J or an equivalent load calculation shall be performed to determine loads of home. A block, or whole house, load calculation is acceptable as opposed to a room-by-room load calculation.

Capacity of the heat pump must be sized within one-half ton (6,000 BTU/hr) of the calculated heating load or the next available size.

Heat pumps shall be sized using a 30° F balance point.

Auxiliary heat capacity shall not exceed 125 percent of the heating design load.

WH—HEAT PUMP WATER HEATERS

WH 1.0—Introduction

This section governs installation requirements for heat pump water heaters. Refer to IN 1.2, IN 1.3, IN 1.14, IN 1.15 and IN 1.16 for additional requirements. See Appendix D for additional best practices regarding heat pump water heaters.

WH 1.1—Installation

The heat pump condensate shall be removed from the area of installation via an adequately sloped drainage system, condensate pump or connection to an existing plumbing drain. If drained to the outdoors, avoid creation of a slip hazard over sidewalks and driveways.

Ensure the unit location meets manufacturer space requirements and that the unit has adequate manufacturer recommended clearances around and above the unit.

APPENDIX A: WEIGHTED ATTIC R-VALUE TABLES

These tables shall be used to determine the weighted R-Value of a single attic space with varying levels of insulation. These figures are determined by using a weighted average R-Value calculation without including framing assembly U-Values:

U-Value (U) = 1 ÷ R-Value

Area (A) = area in sq. ft.

Weighted R-Value = $1 \div [(U_1A_1 + U_2A_2) \div (A_1 + A_2)]$

In cases where the existing insulation level is R-0, an R-Value of R-1 is used in its place to determine weighted R-Value.

50% larger, 50% smaller	Larger Area R-Value								
Smaller Area R-Value	0	4	7	11	14	19	24	30	38
0	1	2	2	2	2	2	2	2	2
4	2	4	5	6	6	7	7	7	7
7	2	5	7	9	9	10	11	11	12
11	2	6	9	11	12	14	15	16	17
14	2	6	9	12	14	16	18	19	20
19	2	7	10	14	16	19	21	23	25
24	2	7	11	15	18	21	24	27	29
30	2	7	11	16	19	23	27	30	34
38	2		12	17	20	25	29	34	38

60% larger, 40% smaller	Larger Area R-Value								
Smaller Area R-Value	0	4	7	11	14	19	24	30	38
0	1	2	2	2	2	2	2	2	2
4	1	4	5	6	7	8	8	8	9
7	2	5	7	9	10	11	12	13	14
11	2	5	8	11	13	15	16	18	19
14	2	6	9	12	14	17	19	21	23
19	2	6	9	13	16	19	22	24	27
24	2	6	10	14	17	21	24	27	31
30	2	6	10	15	18	22	26	30	34
38	2	6	10	15	19	24	28	33	38

70% larger, 30% smaller	Larger Area R-Value								
Smaller Area R-Value	0	4	7	11	14	19	24	30	38
0	1	2	3	3	3	3	3	3	3
4	1	4	6	7	8	9	10	10	11
7	1	5	7	9	11	13	14	15	16
11	1	5	8	11	13	16	18	20	22
14	1	5	8	12	14	17	20	22	25
19	1	5	9	13	15	19	22	26	29
24	1	5	9	13	16	20	24	28	32
30	1	5	9	14	17	21	26	30	35
38	1	5	9	14	17	22	27	32	38

80% larger, 20% smaller	Larger Area R-Value								
Smaller Area R-Value	0	4	7	11	14	19	24	30	38
0	1	3	3	4	4	4	4	4	5
4	1	4	6	8	9	11	12	13	14
7	1	4	7	10	12	14	16	18	20
11	1	5	8	11	13	17	19	22	25
14	1	5	8	11	14	18	21	24	28
19	1	5	8	12	15	19	23	27	32
24	1	5	8	12	15	20	24	29	34
30	1	5	8	13	16	21	25	30	36
38	1	5	8	13	16	21	26	31	38

90% larger, 10% smaller	Larger R-Value Area								
Smaller Area R-Value	0	4	7	11	14	19	24	30	38
0	1	3	4	6	6	7	7	8	8
4	1	4	7	9	11	14	16	18	21
7	1	4	7	10	13	16	19	23	26
11	1	4	7	11	14	18	21	26	31
14	1	4	7	11	14	18	22	27	32
19	1	4	7	11	14	19	23	28	35
24	1	4	8	12	15	19	24	29	36
30	1	4	8	12	15	20	24	30	37
38	1	4	8	12	15	20	25	31	38

APPENDIX B: QUICK REFERENCE GUIDE

(R-Values in Tables 1–4 are typical and intended as guides when specific manufacturer information is unavailable.)

TABLE 1:

Insulation Material	R-Value (per inch)	Description (typical)
Fiberglass loose fill*	2.5	Colors: pink/white/yellow
Fiberglass batts (blanket)*	3.2	pink/white/yellow
Cellulose fiber*	3.5	Light gray/recycled paper products
Rockwool loose fill*	2.8	Black/gray, similar to fiberglass
Vermiculite or Perlite*	2.7	Silver/brown, mica-like
New cellulose fiber**	3.5	pink/white/yellow
New fiberglass loose fill**	2.9	pink/white/yellow

* Indicates derating due to effects of aging and settling

** Indicates value used by during quality assurance inspections if brand or R-value is unknown of new product installed

TABLE 2:

Existing Fiberglass Loose Fill	R-Values
3.5"	9
5"	12.5
6"	15
7"	17.5
8"	20
9"	22.5
10"	25
12"	30
15"–17"	38

Existing Rockwool Loose Fill	R-Values
3.5"	10
5"	14
6"	17
7"	20
8"	22.5
9"	25
10"	28
12"	34
15"	42

TABLE 4:

Existing Cellulose Loose Fill	R-Values
4"	12
5"	17.5
6"	21
7"	24.5
8"	28
9"	31.5
10"	35
11"	38.5
12"	42

APPENDIX C: GLOSSARY

ACCA—Air Conditioning Contractors of America

AFUE—Annual fuel utilization efficiency. Used for gas furnaces and boilers, this rating factors in fuel combustion inefficiencies, exhaust flue heat loss, and heat loss from the appliance itself.

AGA—American Gas Association

AHRI—Air-Conditioning, Heating and Refrigeration Institute

Air barrier—A continuous barrier to air movement that separates interior (conditioned) space from exterior (unconditioned) space. An air barrier is created by sealing all penetrations to unconditioned space with durable materials.

Air Changes per Hour (ACH)—The rate at which the full volume of air of a conditioned space is replaced with unconditioned air over the course of one hour, due to natural conditions. ACH_{50} is the number of times this replacement occurs at a constant pressure of 50 pascals.

Air sealing targets areas—Locations of high importance for effective air sealing, including attic and basement hatches; plumbing and electrical penetrations; large gaps in walls or exterior surfaces; and framing around windows and doors.

ANSI—American National Standards Institute

ASTM—American Society for Testing and Materials

ASTM E-136—A rating for noncombustible materials. Examples include sheet metal and rated caulks. These materials are appropriate for air sealing around a chimney or flue. Products meeting this rating will have the ASTM E-136 rating on the label. No foam meets this rating.

ASTM E-84—A flame spread rating for building materials. Examples include materials made out of mineral, wool, foil-faced fiberglass board and fire-treated corrugated cardboard. Products meeting this rating will have the ASTM E-84 rating on the label.

ASTM E-814—A rating for an assembly of materials that inhibits the spread of fire and hot gases through a home. Examples include gypsum board and ASTM E-814-rated foam and caulk**.** These materials are appropriate for air sealing and may be required by code in some locations.

Auxiliary heat—Applies only to heat pump systems. Electric resistance coils activated when the outdoor temperature is below the heat pump's balance point. Also known as strip heat, second-stage heat, supplemental heat, emergency heat, and backup heat.

Baffles—Rigid material used to contain loose-fill insulation.

Balance point— The point at which a ducted heat pump no longer has capacity to meet 100% of the home's load resulting in the need for auxiliary heat.

Building cavity duct—Any enclosed cavity used for a forced-air duct system. This includes joists where sheet metal forms a pan across the joists.

CAC – Central Air Conditioner

Combustion appliance—Any fuel-burning appliance, including ovens, dryers, water heaters and heating systems, that utilize natural gas, propane, oil, kerosene or wood.

Combustion Appliance Zone (CAZ)—A conditioned space or enclosed area containing a combustion appliance for the purpose of space heating or water heating. Refer to IN 1.12 for general Program requirements, to MA 3.0 for testing procedures for Existing Manufactured Homes projects, and to Appendix D for additional guidelines.

Complete measure—An installation of an Energy Trust incentive-qualifying measure that meets all requirements in the Specifications Manual and the minimum requirements at all reasonably accessible locations. For example, attic insulation shall be R-38 over the entire surface adjacent to conditioned space and ducts shall be sealed at every joint and seam.

Condensate drain—Any drainage system that allows condensation created by condensing gas heating appliances and heat pump equipment to flow into a dedicated drain or outside a building enclosure.

Conditioned basement—Any basement that contains HVAC ducts and/or is accessible from another conditioned space. Other basements may be considered conditioned if they are largely connected to the conditioned space of the house and separated from the outside.

Conditioned space—An enclosed area within a building that is heated and designed, or modified, to have a complete and effective pressure boundary. Garages, barns, unattached shops, sheds, unfinished attics and crawlspaces are considered unconditioned space for the purposes of incentive qualification. Garages are defined as any space, whether heated or not, that feature a large door designed to permit the entry of an automobile. Contact the Existing Homes Program for more information.

Connected area—For purposes of incentives eligibility, an area is considered connected to another area if there is not a complete physical separation between the two. For example, in a half story that has rake attics, a crown attic, and vented sloped cavities between the two, the rake and crown attics are considered connected by the vented sloped cavities.

Crown attic—Uppermost attic flat, adjacent to a sloped cavity; commonly seen in one-and-a-half-story homes.

Cubic feet per minute (CFM)—Rate of flow for air movement between defined areas. CFM_{50} is the rate of air flow at a constant pressure of 50 pascals.

Direct vented appliance—A combustion appliance that pulls outside air for combustion and vents combustion gases directly outside.

ECM – Electronically Commutated Motor

EER – Energy Efficiency Ratio

Electric Cooling – Permanently installed, electric heat pump or ducted electric central air conditioner serving as the home's current primary cooling source. Room air conditioners and evaporative cooler do not qualify

Electric heating – Permanently installed, ducted system consisting of an electric furnace, heat pump with electric resistance backup, or electric zonal heating system (baseboard or ceiling/wall heaters) serving as the home's current primary heat source (space heaters do not qualify). Heat pumps with gas backup are not considered electric heating for the purposes of the Program.

Encapsulated batts—Fiberglass batts with a perforated vinyl cover. Can serve as a vapor-permeable air barrier in human contact/storage areas and are acceptable for installations.

Enclosed cavity—Space bordered on all sides by rigid material.

Exhaust device—A mechanical unit intended to remove indoor air pollutants, including bathroom exhaust fans, dryers and mechanical ventilation devices.

Exterior attic access—Entry into unconditioned attic space directly connected to other unconditioned areas, including garages and outside.

Faced batt-type insulation—Faced batts have an air and/or vapor barrier on one side, usually made of kraft paper.

Flex duct—Flexible plastic sheeting over a metal wire coil.

Ground cover—Six-mil or thicker black polyethylene used to prevent water vapor from emanating from soil in unfinished crawlspaces or basements.

HES – Home Energy Savings

HSPF—heating seasonal performance factor. Records the number of BTUs of heat delivered for each watt-hour of electricity used. Factors in both the high-efficiency compressor and the less-efficient electric resistance backups.

Human contact area—Location where occupants go for routine maintenance or storage.

HVAC—heating, ventilation and air conditioning. Refers to components of a home's mechanical systems that provide space heating and cooling.

IC-rated light fixtures—Insulation Contact-rated fixtures do not need to be baffled to prevent insulation from contact. Insulation may be piled directly on top of fixture. An ICAT fixture is a type of IC-rated light fixture that is manufactured as an airtight unit.

Ignition barrier—A material rated to inhibit the development of flame across its surface, often placed between a known combustible material and a potential heat source.

Interior attic access—Entry into unconditioned attic space directly connected to a conditioned area.

Knee wall—A short wall between an attic floor and a sloping roof that separates a conditioned and unconditioned space.
Minimum ventilation level (MVL)—Level of a structure's natural ventilation, below which mechanical ventilation is required.

Non-electric heating— Heating system with gas, oil, wood, pellet stoves, and propane serving as the home's current primary heat source

Net Free Area (NFA)—The net area of properly baffled passive ventilation; the total area of the vent minus the area blocked by screens or louvers.

Open wall(s)—Any vertical barrier between conditioned and unconditioned space where the framing is visible from any side.

Pa – Pascal

Passive ventilation—Natural ventilation of a space caused by wind or temperature-driven convection. Does not include moving parts such as fans.

Performance-based duct sealing—Sealing ductwork in compliance with PTCS guidelines, which includes the use of a pressure test to evaluate the duct system's air leakage to outside, both before and after work is performed.

Post and beam—Floor construction using a support system of beams typically spaced 30"–48" on center. See UN 2.2 for spacing/spans.

Prescriptive duct sealing—Sealing ductwork in compliance with Program guidelines, without the use of pressure diagnostic tests to identify and quantify air leakage to outside.

Primary heating system—The main heating equipment that is permanently installed and designed to provide the majority of heat inside a home, regardless of use or condition. Existing Homes cash incentives are available for homes with an electric or natural gas primary heating system with fuel provided by Portland General Electric, Pacific Power, NW Natural Gas or Cascade Natural Gas.

QPL – Qualified Products List

R-Value—Measurement of a material's thermal resistance, commonly used to describe insulation materials. An increase in R-Value results in an increase in thermal resistance. R-Value is the inverse of
U-Value (R = 1/U).

Rake—Horizontal section of side attic.

Register—A ventilation grill separating HVAC ducting from conditioned space.

Return—Duct that brings conditioned air from the house to the air handler.

Rim or band joist—Area of a home where the concrete foundation meets the floor joists.

RMP – Rocky Mountain Power

SEER—seasonal energy efficiency ratio. SEER compares the number of BTUs of heat removed per watt-hour of electricity used on a seasonal basis.

Side attics—Unfinished areas located on the same floor as, and adjacent to, finished spaces. May be considered conditioned or unconditioned, depending on certain criteria.

Skylight—Any window unit in an opening in the roof assembly, including one that is installed at a slope of 15 degrees from vertical or greater.

Sloped ceilings—Angled ceilings, including vaults, over conditioned spaces that may follow the roof line or intrude into the attic space above and may require special consideration when installing insulation.

Spray-foam insulation—A foam-plastic material applied with a foaming agent for use as insulation.

Steady state—Heating equipment, such as a gas furnace, enters a steady state when all heating-related components reach the temperature at which they will remain until the end of the heating cycle.

Supply—Delivers conditioned air from the air handler into the home.

Thermal barrier— A material rated to resist heat and flame transmission across its surface, significantly slowing flame spread and limiting the potential fuel source available to an open flame.

Thermal boundary—Any surface or building material that serves to resist the transmission of heat energy between conditioned and unconditioned space.

Thermal envelope— The collection of all surfaces and building materials in a structure that resist air loss and heat transmission between conditioned and unconditioned space. Often referred to as the "building envelope."

TXV – Thermal Expansion Valve

U-Value—Measurement of a material's thermal transmission, commonly used to describe windows, doors and skylights. A decrease in U-Value results in a decrease in thermal transmission. U-Value is the inverse of R-Value (U = 1/R).

Unconditioned space—Space within a building that is not heated or cooled by an active system or directly linked to conditioned space; outside.

Unfaced batt-type insulation—Batt-type insulation with no vapor or air barrier attached.

Upper attics—Unfinished areas located above finished spaces. Upper attics are usually considered unconditioned space, except in rare cases.

Vapor barrier—A material restricting the movement of water vapor from an area of high vapor pressure to one of lower pressure. Material with a perm rating of 1.0 or less is normally considered a vapor barrier.

Vapor-permeable air barrier—Any material, including house wrap, that substantively blocks air from passing, but allows water vapor to pass through via pores that are narrower than air.

WCI – Water Column Inches

Weatherization measure—Installation of insulation, air sealing, duct sealing and/or windows.

Weather-resistant barrier—The outermost surface in the building envelope that is specifically designed to prevent water/moisture from entering a building or building cavity. Aluminum or vinyl siding is not considered a weather-resistant barrier.

Wintertime conditions— A scenario where all overhead garage doors, exterior doors, windows, flues and dampers are closed, all interior doors and duct registers are open, and all ventilation fans are shut off. Used to perform performance-based air leakage and duct leakage tests.

APPENDIX D: BEST PRACTICE GUIDELINES

This appendix lists best practice guidelines for installing high-quality, long-term energy-efficiency measures, equipment, and services. **Guidelines contained in this appendix are not Program requirements**. They are intended to provide beneficial advice when performing energy efficiency upgrades.

Best Practice: Air Sealing
The Program recommends including a mechanical ventilation strategy as part of the scope of work if air sealing may result in occupant health and safety concerns and/or building durability concerns.

Air sealing is not recommended if a visual inspection determines the home has obvious indoor air quality concerns.

Best Practice: Attic Insulation
The Program recommends all ducts in attic spaces to be sealed according to section DU so the energy-saving opportunity is not lost after insulation is installed.

Existing pest or moisture problems should be addressed to ensure measure and building durability.

An attic insulation certificate should be displayed in plain view of the access hatch that details square footage of insulation installed, bag count, initial R-value, finished R-value, brand, and date installed.

To prevent water vapor transmission and support the effective R-Value of the attic insulation, the Program recommends sealing all accessible attic penetrations between conditioned and unconditioned space. Attic air sealing opportunities include plumbing, wiring and duct penetrations, top plates, mechanical chases, soffits and similar openings in the air barrier of the attic. When air sealing, appropriate backing materials should be used to bridge openings that cannot be effectively closed by a sealant. Caulk, foam or other compatible sealants should be used. See the Section AS in this manual for additional guidelines.

Best Practice: Wall Insulation
The Program strongly recommends that weather-resistant barriers (WRB) are repaired/replaced when affected by the installation of wall insulation. Plugs that are located at the sub-siding should be covered with a properly installed WRB after the plugs are sealed. When possible, needed runs of siding should be removed and insulation installed through holes drilled through the sub-siding

Best Practice: Carbon Monoxide
The Program strongly recommends that a carbon monoxide alarm be installed whenever a weatherization measure is performed.

Carbon monoxide alarms should be installed in each bedroom of a house or at minimum within 15 feet of each sleeping area. Contractors should educate their customers on the use of carbon monoxide alarms and precautions that should be

taken if the alarm activates. The intention of the alarm is to warn occupants before they experience the symptoms of carbon monoxide poisoning.

Best Practice: Manufactured Homes
All HVAC ductwork, including plenums, shall be repaired, sealed and properly supported, according to section DU before underfloor insulation is installed. Non-ducted return-air systems in the floor cavity shall be eliminated.

Best Practice: Spray-Foam Insulation
Customers should be notified if spray-foam insulation will limit access to electrical services, natural gas lines, HVAC system components or plumbing.

Best Practice: Heating Systems
Existing Homes recommends that heating and cooling systems be sized in accordance with Manual S, Manual D, Manual J, Spec Pro or another industry-accepted HVAC calculation methodology based on building heating loads. The equipment manufacturer's selection procedures and sizing guidelines should be referenced as part of the HVAC planning and sizing process.

Best Practice: Ductless Heat Pumps
Size the unit appropriately to the space to be conditioned; oversized systems negatively impact unit performance.

For optimal performance of the unit, the program recommends using risers between the unit and the permanent pad. Adjustable risers will help prevent debris and snow buildup and allow for better drainage. Riser blocks specifically manufactured/intended for this purpose should be used. The riser blocks should be mechanically or chemically secured to the pad. A pan heater can prevent defrost discharge from freezing inside the compressor and is recommended in extreme climates.

Educate homeowner on filter cleaning and other manufacturer recommended maintenance.

For more information on installation best practices for DHPs, see NW Ductless Heat Pump project's Best Practice Guide: https://goingductless.com/assets/documents/uploads/DHP_BP-Guide_FNL.pdf

For additional information on supplementing electric forced air furnaces with ductless heat pumps, see http://www.bpa.gov/energy/n/emerging_technology/pdf/DHP_FAF_Dec_12.pdf.

Best Practice: Heat Pumps

The Program recommends that the maximum line set length be less than or equal to the manufacturer's specifications, and the line set diameter shall match the manufacturer's recommendations. Line sets should be insulated over their entire length.

The Program recommends that outdoor units be checked for adequate airflow using a TrueFlow Air Handler Flow Meter™.

Strip heat should be set up to not come on in the first stage of operation. Refrigerant charge should be installed in accordance with the manufacturer's specifications. Airflow should be a minimum of 350 CFM per ton.

Best Practice: Heat Pump Water Heaters

If ducting is installed, apply duct insulation and a vapor barrier, or use suitable plastic ducting, to prevent condensation formation on ductwork. If exhaust air only is ducted outside of conditioned space, contractor should ensure combustion appliances are functioning properly and safely and a carbon monoxide alarm should be installed in the home if combustion appliances are present.

Installed ducting should be done to manufacturer's specifications, with manufacturer-approved parts.

Avoid installations near bedrooms or living rooms; if unavoidable, consider using noise dampening features in the space or isolate vibration if noise is a concern. Also consider homeowner comfort impacts of cold air exhaust.

Refer to manufacturer's specifications for efficient mode operation.

Demonstrate filter access and maintenance to homeowner.

Any plumbing lines in unconditioned space should be insulated to prevent energy loss and frozen pipes.

APPENDIX E: THE ENERGY CONVERVATORY FLOW CONVERSION TABLES

Table A.1: Flow Conversion Table for TrueFlow Metering Plates (using Pascals)

Plate Pressure (Pascals)	Plate #14 (CFM)	Plate #20 (CFM)
10	364	487
11	381	511
12	398	533
13	415	555
14	430	576
15	445	596
16	460	616
17	474	635
18	488	653
19	501	671
20	514	689
21	527	706
22	539	722
23	552	739
24	563	754
25	575	770
26	586	785
27	598	800
28	609	815
29	619	829
30	630	843
31	640	857
32	651	871
33	661	885
34	671	898
35	680	911
36	690	924
37	700	937
38	709	949
39	718	962
40	727	974
41	736	986
42	745	998
43	754	1010
44	763	1022
45	771	1033
46	780	1044
47	788	1056
48	797	1067
49	805	1078
50	813	1089
51	821	1100
52	829	1111
53	837	1121
54	845	1132
55	853	1142
56	861	1152
57	868	1163
58	876	1173
59	883	1183
60	891	1193
61	898	1203
62	906	1213
63	913	1222
64	920	1232
65	927	1242
66	934	1251
67	941	1261
68	948	1270
69	955	1279
70	962	1288
71	969	1298
72	976	1307
73	983	1316
74	989	1325
75	996	1334
76	1003	1343
77	1009	1351
78	1016	1360
79	1022	1369
80	1029	1377
81	1035	1386
82	1041	1395
83	1048	1403
84	1054	1411
85	1060	1420
86	1066	1428
87	1073	1436
88	1079	1445
89	1085	1453
90	1091	1461
91	1097	1469
92	1103	1477
93	1109	1485
94	1115	1493
95	1121	1501
96	1127	1509
97	1133	1517
98	1138	1525
99	1144	1532
100	1150	1540
101	1156	1548
102	1161	1555
103	1167	1563
104	1173	1570
105	1178	1578
106	1184	1586
107	1190	1593
108	1195	1600
109	1201	1608
110	1206	1615
111	1212	1622
112	1217	1630
113	1222	1637
114	1228	1644
115	1233	1651
116	1239	1659
117	1244	1666
118	1249	1673
119	1255	1680
120	1260	1687
121	1265	1694
122	1270	1701
123	1275	1708
124	1281	1715
125	1286	1722
126	1291	1729
127	1296	1735
128	1301	1742
129	1306	1749
130	1311	1756
131	1316	1763
132	1321	1769
133	1326	1776
134	1331	1783
135	1336	1789
136	1341	1796
137	1346	1803
138	1351	1809
139	1356	1816
140	1361	1822
141	1366	1829
142	1370	1835
143	1375	1842
144	1380	1848
145	1385	1854
146	1390	1861
147	1394	1867
148	1399	1873
149	1404	1880
150	1408	1886
151	1413	1892
152	1418	1899
153	1422	1905
154	1427	1911
155	1432	1917
156	1436	1923
157	1441	1930
158	1446	1936
159	1450	1942
160	1455	1948
161	1459	1954
162	1464	1960
163	1468	1966
164	1473	1972
165	1477	1978
166	1482	1984
167	1486	1990
168	1491	1996
169	1495	2002
170	1499	2008
171	1504	2014
172	1508	2020
173	1513	2026
174	1517	2031
175	1521	2037
176	1526	2043
177	1530	2049
178	1534	2055
179	1539	2060
180	1543	2066
181	1547	2072
182	1551	2078
183	1556	2083
184	1560	2089
185	1564	2095

18

TEC
The Energy Conservatory

Table A.2: Flow Conversion Table for TrueFlow Metering Plates (using In. H_2O)

Plate Pressure	Plate #14	Plate #20
(In. H_20)	(CFM)	(CFM)
0.040	362	485
0.045	384	515
0.050	405	543
0.055	425	569
0.060	444	594
0.065	462	619
0.070	479	642
0.075	496	665
0.080	513	686
0.085	528	708
0.090	544	728
0.095	559	748
0.100	573	767
0.105	587	786
0.110	601	805
0.115	615	823
0.120	628	841
0.125	641	858
0.130	653	875
0.135	666	892
0.140	678	908
0.145	690	924
0.150	702	940
0.155	713	955
0.160	725	971
0.165	736	986
0.170	747	1001
0.175	758	1015
0.180	769	1030
0.185	779	1044
0.190	790	1058
0.195	800	1072
0.200	810	1085
0.172	752	1007
0.176	760	1018
0.180	769	1030
0.184	777	1041
0.188	786	1052
0.192	794	1063
0.196	802	1074
0.200	810	1085
0.205	821	1099
0.210	830	1112
0.215	840	1125
0.220	850	1138
0.225	860	1151
0.230	869	1164
0.235	879	1176
0.240	888	1189
0.245	897	1201
0.250	906	1213
0.255	915	1226
0.260	924	1237
0.265	933	1249
0.270	942	1261
0.275	950	1273
0.280	959	1284
0.285	967	1296
0.290	976	1307
0.295	984	1318
0.300	993	1329
0.305	1001	1340
0.310	1009	1351
0.315	1017	1362
0.320	1025	1373
0.325	1033	1384
0.330	1041	1394
0.335	1049	1405
0.340	1057	1415
0.345	1064	1425
0.350	1072	1436
0.355	1080	1446
0.360	1087	1456
0.365	1095	1466
0.370	1102	1476
0.375	1110	1486
0.380	1117	1496
0.385	1124	1506
0.390	1132	1516
0.395	1139	1525
0.400	1146	1535
0.405	1153	1544
0.410	1160	1554
0.415	1167	1563
0.420	1174	1573
0.425	1181	1582
0.430	1188	1591
0.435	1195	1601
0.440	1202	1610
0.445	1209	1619
0.450	1216	1628
0.455	1222	1637
0.460	1229	1646
0.465	1236	1655
0.470	1242	1664
0.475	1249	1673
0.480	1256	1681
0.485	1262	1690
0.490	1269	1699
0.495	1275	1707
0.500	1281	1716
0.505	1288	1725
0.510	1294	1733
0.515	1301	1742
0.520	1307	1750
0.525	1313	1758
0.530	1319	1767
0.535	1326	1775
0.540	1332	1783
0.545	1338	1792
0.550	1344	1800
0.555	1350	1808
0.560	1356	1816
0.565	1362	1824
0.570	1368	1832
0.575	1374	1840
0.580	1380	1848
0.585	1386	1856
0.590	1392	1864
0.595	1398	1872
0.600	1404	1880
0.605	1410	1888
0.610	1415	1895
0.615	1421	1903
0.620	1427	1911
0.625	1433	1919
0.630	1438	1926
0.635	1444	1934
0.640	1450	1942
0.645	1455	1949
0.650	1461	1957
0.655	1467	1964
0.660	1472	1972
0.665	1478	1979
0.670	1483	1986
0.675	1489	1994
0.680	1494	2001
0.685	1500	2009
0.690	1505	2016
0.695	1511	2023
0.700	1516	2030
0.705	1522	2038
0.710	1527	2045
0.715	1532	2052
0.720	1538	2059
0.725	1543	2066
0.730	1548	2074
0.735	1554	2081
0.740	1559	2088
0.745	1564	2095
0.750	1569	2102

APPENDIX F: THE ENERGY CONVERVATORY FLOW RESISTANCE CORRECTION FACTORS

Table B.1: Flow Resistance Correction Factors (using Pascals)

Normal System Operating Pressure in Pascals (NSOP)

TrueFlow System Operating Pressure in Pascals. (TF SOP)	10	12	14	16	18	20	22	24	26	28	30	32	34	36	38	40	42	44	46	48	50
10	1.00	1.10	1.18	1.26	1.34	1.41	1.48	1.55	1.61	1.67	1.73	1.79	1.84	1.90	1.95	2.00	2.05	2.10	2.14	2.19	2.24
12	0.91	1.00	1.08	1.15	1.22	1.29	1.35	1.41	1.47	1.53	1.58	1.63	1.68	1.73	1.78	1.83	1.87	1.91	1.96	2.00	2.04
14	0.85	0.93	1.00	1.07	1.13	1.20	1.25	1.31	1.36	1.41	1.46	1.51	1.56	1.60	1.65	1.69	1.73	1.77	1.81	1.85	1.89
16	0.79	0.87	0.94	1.00	1.06	1.12	1.17	1.22	1.27	1.32	1.37	1.41	1.46	1.50	1.54	1.58	1.62	1.66	1.70	1.73	1.77
18	0.75	0.82	0.88	0.94	1.00	1.05	1.11	1.15	1.20	1.25	1.29	1.33	1.37	1.41	1.45	1.49	1.53	1.56	1.60	1.63	1.67
20	0.71	0.77	0.84	0.89	0.95	1.00	1.05	1.10	1.14	1.18	1.22	1.26	1.30	1.34	1.38	1.41	1.45	1.48	1.52	1.55	1.58
22	0.67	0.74	0.80	0.85	0.90	0.95	1.00	1.04	1.09	1.13	1.17	1.21	1.24	1.28	1.31	1.35	1.38	1.41	1.45	1.48	1.51
24	0.65	0.71	0.76	0.82	0.87	0.91	0.96	1.00	1.04	1.08	1.12	1.15	1.19	1.22	1.26	1.29	1.32	1.35	1.38	1.41	1.44
26	0.62	0.68	0.73	0.78	0.83	0.88	0.92	0.96	1.00	1.04	1.07	1.11	1.14	1.18	1.21	1.24	1.27	1.30	1.33	1.36	1.39
28	0.60	0.65	0.71	0.76	0.80	0.85	0.89	0.93	0.96	1.00	1.04	1.07	1.10	1.13	1.16	1.20	1.22	1.25	1.28	1.31	1.34
30	0.58	0.63	0.68	0.73	0.77	0.82	0.86	0.89	0.93	0.97	1.00	1.03	1.06	1.10	1.13	1.15	1.18	1.21	1.24	1.26	1.29
32	0.56	0.61	0.66	0.71	0.75	0.79	0.83	0.87	0.90	0.94	0.97	1.00	1.03	1.06	1.09	1.12	1.15	1.17	1.20	1.22	1.25
34	0.54	0.59	0.64	0.69	0.73	0.77	0.80	0.84	0.87	0.91	0.94	0.97	1.00	1.03	1.06	1.08	1.11	1.14	1.16	1.19	1.21
36	0.53	0.58	0.62	0.67	0.71	0.75	0.78	0.82	0.85	0.88	0.91	0.94	0.97	1.00	1.03	1.05	1.08	1.11	1.13	1.15	1.18
38	0.51	0.56	0.61	0.65	0.69	0.73	0.76	0.79	0.83	0.86	0.89	0.92	0.95	0.97	1.00	1.03	1.05	1.08	1.10	1.12	1.15
40	0.50	0.55	0.59	0.63	0.67	0.71	0.74	0.77	0.81	0.84	0.87	0.89	0.92	0.95	0.97	1.00	1.02	1.05	1.07	1.10	1.12
42	0.49	0.53	0.58	0.62	0.65	0.69	0.72	0.76	0.79	0.82	0.85	0.87	0.90	0.93	0.95	0.98	1.00	1.02	1.05	1.07	1.09
44	0.48	0.52	0.56	0.60	0.64	0.67	0.71	0.74	0.77	0.80	0.83	0.85	0.88	0.90	0.93	0.95	0.98	1.00	1.02	1.04	1.07
46	0.47	0.51	0.55	0.59	0.63	0.66	0.69	0.72	0.75	0.78	0.81	0.83	0.86	0.88	0.91	0.93	0.96	0.98	1.00	1.02	1.04
48	0.46	0.50	0.54	0.58	0.61	0.65	0.68	0.71	0.74	0.76	0.79	0.82	0.84	0.87	0.89	0.91	0.94	0.96	0.98	1.00	1.02
50	0.45	0.49	0.53	0.57	0.60	0.63	0.66	0.69	0.72	0.75	0.77	0.80	0.82	0.85	0.87	0.89	0.92	0.94	0.96	0.98	1.00

Normal System Operating Pressure in Pascals (NSOP)

TrueFlow System Operating Pressure in Pascals. (TF SOP)	50	55	60	65	70	75	80	85	90	95	100	105	110	115	120	125	130	135	140	145	150
50	1.00	1.05	1.10	1.14	1.18	1.22	1.26	1.30	1.34	1.38	1.41	1.45	1.48	1.52	1.55	1.58	1.61	1.64	1.67	1.70	1.73
55	0.95	1.00	1.04	1.09	1.13	1.17	1.21	1.24	1.28	1.31	1.35	1.38	1.41	1.45	1.48	1.51	1.54	1.57	1.60	1.62	1.65
60	0.91	0.96	1.00	1.04	1.08	1.12	1.15	1.19	1.22	1.26	1.29	1.32	1.35	1.38	1.41	1.44	1.47	1.50	1.53	1.55	1.58
65	0.88	0.92	0.96	1.00	1.04	1.07	1.11	1.14	1.18	1.21	1.24	1.27	1.30	1.33	1.36	1.39	1.41	1.44	1.47	1.49	1.52
70	0.85	0.89	0.93	0.96	1.00	1.04	1.07	1.10	1.13	1.16	1.20	1.22	1.25	1.28	1.31	1.34	1.36	1.39	1.41	1.44	1.46
75	0.82	0.86	0.89	0.93	0.97	1.00	1.03	1.06	1.10	1.13	1.15	1.18	1.21	1.24	1.26	1.29	1.32	1.34	1.37	1.39	1.41
80	0.79	0.83	0.87	0.90	0.94	0.97	1.00	1.03	1.06	1.09	1.12	1.15	1.17	1.20	1.22	1.25	1.27	1.30	1.32	1.35	1.37
85	0.77	0.80	0.84	0.87	0.91	0.94	0.97	1.00	1.03	1.06	1.08	1.11	1.14	1.16	1.19	1.21	1.24	1.26	1.28	1.31	1.33
90	0.75	0.78	0.82	0.85	0.88	0.91	0.94	0.97	1.00	1.03	1.05	1.08	1.11	1.13	1.15	1.18	1.20	1.22	1.25	1.27	1.29
95	0.73	0.76	0.79	0.83	0.86	0.89	0.92	0.95	0.97	1.00	1.03	1.05	1.08	1.10	1.12	1.15	1.17	1.19	1.21	1.24	1.26
100	0.71	0.74	0.77	0.81	0.84	0.87	0.89	0.92	0.95	0.97	1.00	1.02	1.05	1.07	1.10	1.12	1.14	1.16	1.18	1.20	1.22
105	0.69	0.72	0.76	0.79	0.82	0.85	0.87	0.90	0.93	0.95	0.98	1.00	1.02	1.05	1.07	1.09	1.11	1.13	1.15	1.18	1.20
110	0.67	0.71	0.74	0.77	0.80	0.83	0.85	0.88	0.90	0.93	0.95	0.98	1.00	1.02	1.04	1.07	1.09	1.11	1.13	1.15	1.17
115	0.66	0.69	0.72	0.75	0.78	0.81	0.83	0.86	0.88	0.91	0.93	0.96	0.98	1.00	1.02	1.04	1.06	1.08	1.10	1.12	1.14
120	0.65	0.68	0.71	0.74	0.76	0.79	0.82	0.84	0.87	0.89	0.91	0.94	0.96	0.98	1.00	1.02	1.04	1.06	1.08	1.10	1.12
125	0.63	0.66	0.69	0.72	0.75	0.77	0.80	0.82	0.85	0.87	0.89	0.92	0.94	0.96	0.98	1.00	1.02	1.04	1.06	1.08	1.10
130	0.62	0.65	0.68	0.71	0.73	0.76	0.78	0.81	0.83	0.85	0.88	0.90	0.92	0.94	0.96	0.98	1.00	1.02	1.04	1.06	1.07
135	0.61	0.64	0.67	0.69	0.72	0.75	0.77	0.79	0.82	0.84	0.86	0.88	0.90	0.92	0.94	0.96	0.98	1.00	1.02	1.04	1.05
140	0.60	0.63	0.65	0.68	0.71	0.73	0.76	0.78	0.80	0.82	0.85	0.87	0.89	0.91	0.93	0.94	0.96	0.98	1.00	1.02	1.04
145	0.59	0.62	0.64	0.67	0.69	0.72	0.74	0.77	0.79	0.81	0.83	0.85	0.87	0.89	0.91	0.93	0.95	0.96	0.98	1.00	1.02
150	0.58	0.61	0.63	0.66	0.68	0.71	0.73	0.75	0.77	0.80	0.82	0.84	0.86	0.88	0.89	0.91	0.93	0.95	0.97	0.98	1.00

Flow Resistance Correction Factor = $\sqrt{\text{NSOP / TF SOP}}$

20

Table B.2: Flow Resistance Correction Factors (using In. H_2O)

Normal System Operating Pressure in In. H_2O (NSOP)

TrueFlow System Operating Pressure in In. H_20 (TF SOP)	0.04	0.05	0.06	0.07	0.08	0.09	0.10	0.11	0.12	0.13	0.14	0.15	0.16	0.17	0.18	0.19	0.20	0.21	0.22	0.23	0.24
0.04	1.00	1.12	1.22	1.32	1.41	1.50	1.58	1.66	1.73	1.80	1.87	1.94	2.00	2.06	2.12	2.18	2.24	2.29	2.35	2.40	2.45
0.05	0.89	1.00	1.10	1.18	1.26	1.34	1.41	1.48	1.55	1.61	1.67	1.73	1.79	1.84	1.90	1.95	2.00	2.05	2.10	2.14	2.19
0.06	0.82	0.91	1.00	1.08	1.15	1.22	1.29	1.35	1.41	1.47	1.53	1.58	1.63	1.68	1.73	1.78	1.83	1.87	1.91	1.96	2.00
0.07	0.76	0.85	0.93	1.00	1.07	1.13	1.20	1.25	1.31	1.36	1.41	1.46	1.51	1.56	1.60	1.65	1.69	1.73	1.77	1.81	1.85
0.08	0.71	0.79	0.87	0.94	1.00	1.06	1.12	1.17	1.22	1.27	1.32	1.37	1.41	1.46	1.50	1.54	1.58	1.62	1.66	1.70	1.73
0.09	0.67	0.75	0.82	0.88	0.94	1.00	1.05	1.11	1.15	1.20	1.25	1.29	1.33	1.37	1.41	1.45	1.49	1.53	1.56	1.60	1.63
0.10	0.63	0.71	0.77	0.84	0.89	0.95	1.00	1.05	1.10	1.14	1.18	1.22	1.26	1.30	1.34	1.38	1.41	1.45	1.48	1.52	1.55
0.11	0.60	0.67	0.74	0.80	0.85	0.90	0.95	1.00	1.04	1.09	1.13	1.17	1.21	1.24	1.28	1.31	1.35	1.38	1.41	1.45	1.48
0.12	0.58	0.65	0.71	0.76	0.82	0.87	0.91	0.96	1.00	1.04	1.08	1.12	1.15	1.19	1.22	1.26	1.29	1.32	1.35	1.38	1.41
0.13	0.55	0.62	0.68	0.73	0.78	0.83	0.88	0.92	0.96	1.00	1.04	1.07	1.11	1.14	1.18	1.21	1.24	1.27	1.30	1.33	1.36
0.14	0.53	0.60	0.65	0.71	0.76	0.80	0.85	0.89	0.93	0.96	1.00	1.04	1.07	1.10	1.13	1.16	1.20	1.22	1.25	1.28	1.31
0.15	0.52	0.58	0.63	0.68	0.73	0.77	0.82	0.86	0.89	0.93	0.97	1.00	1.03	1.06	1.10	1.13	1.15	1.18	1.21	1.24	1.26
0.16	0.50	0.56	0.61	0.66	0.71	0.75	0.79	0.83	0.87	0.90	0.94	0.97	1.00	1.03	1.06	1.09	1.12	1.15	1.17	1.20	1.22
0.17	0.49	0.54	0.59	0.64	0.69	0.73	0.77	0.80	0.84	0.87	0.91	0.94	0.97	1.00	1.03	1.06	1.08	1.11	1.14	1.16	1.19
0.18	0.47	0.53	0.58	0.62	0.67	0.71	0.75	0.78	0.82	0.85	0.88	0.91	0.94	0.97	1.00	1.03	1.05	1.08	1.11	1.13	1.15
0.19	0.46	0.51	0.56	0.61	0.65	0.69	0.73	0.76	0.79	0.83	0.86	0.89	0.92	0.95	0.97	1.00	1.03	1.05	1.08	1.10	1.12
0.20	0.45	0.50	0.55	0.59	0.63	0.67	0.71	0.74	0.77	0.81	0.84	0.87	0.89	0.92	0.95	0.97	1.00	1.02	1.05	1.07	1.10
0.21	0.44	0.49	0.53	0.58	0.62	0.65	0.69	0.72	0.76	0.79	0.82	0.85	0.87	0.90	0.93	0.95	0.98	1.00	1.02	1.05	1.07
0.22	0.43	0.48	0.52	0.56	0.60	0.64	0.67	0.71	0.74	0.77	0.80	0.83	0.85	0.88	0.90	0.93	0.95	0.98	1.00	1.02	1.04
0.23	0.42	0.47	0.51	0.55	0.59	0.63	0.66	0.69	0.72	0.75	0.78	0.81	0.83	0.86	0.88	0.91	0.93	0.96	0.98	1.00	1.02
0.24	0.41	0.46	0.50	0.54	0.58	0.61	0.65	0.68	0.71	0.74	0.76	0.79	0.82	0.84	0.87	0.89	0.91	0.94	0.96	0.98	1.00

Normal System Operating Pressure in In. H_2O (NSOP)

TrueFlow System Operating Pressure in In. H_20 (TF SOP)	0.20	0.22	0.24	0.26	0.28	0.30	0.32	0.34	0.36	0.38	0.40	0.42	0.44	0.46	0.48	0.50	0.52	0.54	0.56	0.58	0.60
0.20	1.00	1.05	1.10	1.14	1.18	1.22	1.26	1.30	1.34	1.38	1.41	1.45	1.48	1.52	1.55	1.58	1.61	1.64	1.67	1.70	1.73
0.22	0.95	1.00	1.04	1.09	1.13	1.17	1.21	1.24	1.28	1.31	1.35	1.38	1.41	1.45	1.48	1.51	1.54	1.57	1.60	1.62	1.65
0.24	0.91	0.96	1.00	1.04	1.08	1.12	1.15	1.19	1.22	1.26	1.29	1.32	1.35	1.38	1.41	1.44	1.47	1.50	1.53	1.55	1.58
0.26	0.88	0.92	0.96	1.00	1.04	1.07	1.11	1.14	1.18	1.21	1.24	1.27	1.30	1.33	1.36	1.39	1.41	1.44	1.47	1.49	1.52
0.28	0.85	0.89	0.93	0.96	1.00	1.04	1.07	1.10	1.13	1.16	1.20	1.22	1.25	1.28	1.31	1.34	1.36	1.39	1.41	1.44	1.46
0.30	0.82	0.86	0.89	0.93	0.97	1.00	1.03	1.06	1.10	1.13	1.15	1.18	1.21	1.24	1.26	1.29	1.32	1.34	1.37	1.39	1.41
0.32	0.79	0.83	0.87	0.90	0.94	0.97	1.00	1.03	1.06	1.09	1.12	1.15	1.17	1.20	1.22	1.25	1.27	1.30	1.32	1.35	1.37
0.34	0.77	0.80	0.84	0.87	0.91	0.94	0.97	1.00	1.03	1.06	1.08	1.11	1.14	1.16	1.19	1.21	1.24	1.26	1.28	1.31	1.33
0.36	0.75	0.78	0.82	0.85	0.88	0.91	0.94	0.97	1.00	1.03	1.05	1.08	1.11	1.13	1.15	1.18	1.20	1.22	1.25	1.27	1.29
0.38	0.73	0.76	0.79	0.83	0.86	0.89	0.92	0.95	0.97	1.00	1.03	1.05	1.08	1.10	1.12	1.15	1.17	1.19	1.21	1.24	1.26
0.40	0.71	0.74	0.77	0.81	0.84	0.87	0.89	0.92	0.95	0.97	1.00	1.02	1.05	1.07	1.10	1.12	1.14	1.16	1.18	1.20	1.22
0.42	0.69	0.72	0.76	0.79	0.82	0.85	0.87	0.90	0.93	0.95	0.98	1.00	1.02	1.05	1.07	1.09	1.11	1.13	1.15	1.18	1.20
0.44	0.67	0.71	0.74	0.77	0.80	0.83	0.85	0.88	0.90	0.93	0.95	0.98	1.00	1.02	1.04	1.07	1.09	1.11	1.13	1.15	1.17
0.46	0.66	0.69	0.72	0.75	0.78	0.81	0.83	0.86	0.88	0.91	0.93	0.96	0.98	1.00	1.02	1.04	1.06	1.08	1.10	1.12	1.14
0.48	0.65	0.68	0.71	0.74	0.76	0.79	0.82	0.84	0.87	0.89	0.91	0.94	0.96	0.98	1.00	1.02	1.04	1.06	1.08	1.10	1.12
0.50	0.63	0.66	0.69	0.72	0.75	0.77	0.80	0.82	0.85	0.87	0.89	0.92	0.94	0.96	0.98	1.00	1.02	1.04	1.06	1.08	1.10
0.52	0.62	0.65	0.68	0.71	0.73	0.76	0.78	0.81	0.83	0.85	0.88	0.90	0.92	0.94	0.96	0.98	1.00	1.02	1.04	1.06	1.07
0.54	0.61	0.64	0.67	0.69	0.72	0.75	0.77	0.79	0.82	0.84	0.86	0.88	0.90	0.92	0.94	0.96	0.98	1.00	1.02	1.04	1.05
0.56	0.60	0.63	0.65	0.68	0.71	0.73	0.76	0.78	0.80	0.82	0.85	0.87	0.89	0.91	0.93	0.94	0.96	0.98	1.00	1.02	1.04
0.58	0.59	0.62	0.64	0.67	0.69	0.72	0.74	0.77	0.79	0.81	0.83	0.85	0.87	0.89	0.91	0.93	0.95	0.96	0.98	1.00	1.02
0.60	0.58	0.61	0.63	0.66	0.68	0.71	0.73	0.75	0.77	0.80	0.82	0.84	0.86	0.88	0.89	0.91	0.93	0.95	0.97	0.98	1.00

Flow Resistance Correction Factor = $\sqrt{\text{NSOP / TF SOP}}$

21

APPENDIX G: STATIC PRESSURE AIR FLOW CHART

1. Measure total static pressure of system
2. Set fan speed setting on air handler to achieve 350 CFM/ton according to chart

Generic Fan Chart 1.5 Ton- 5 Ton

1.5 Ton	Total Static	0.1	0.2	0.3	0.4	0.5	0.6	0.7	0.8	0.9	1	1.1	1.2	1.3
Speed Tap	High / ECM	1067	1005	943	881	819	758	696	634	572	510	448	387	325
	Med-High	953	891	830	768	706	644	582	520	459	397	335	273	211
	Med	840	778	716	654	592	531	469	407	345	283	221	160	98
	Med-Low	726	664	603	541	479	417	355	293	232	170	108	46	-
	Low	613	551	489	427	365	304	242	180	118	56	-	-	-
2 Ton	**Total Static**	**0.1**	**0.2**	**0.3**	**0.4**	**0.5**	**0.6**	**0.7**	**0.8**	**0.9**	**1**	**1.1**	**1.2**	**1.3**
Speed Tap	High / ECM	1236	1174	1112	1050	989	927	865	803	741	679	618	556	494
	Med-High	1122	1061	999	937	875	813	751	690	628	566	504	442	380
	Med	1009	947	885	823	762	700	638	576	514	452	391	329	267
	Med-Low	895	834	772	710	648	586	524	463	401	339	277	215	153
	Low	782	720	658	596	535	473	411	349	287	225	164	102	40
2.5 Ton	**Total Static**	**0.1**	**0.2**	**0.3**	**0.4**	**0.5**	**0.6**	**0.7**	**0.8**	**0.9**	**1**	**1.1**	**1.2**	**1.3**
Speed Tap	High / ECM	1405	1343	1281	1220	1158	1096	1034	972	910	848	787	725	663
	Med-High	1292	1230	1168	1106	1044	982	921	859	797	735	673	611	550
	Med	1178	1116	1054	993	931	869	807	745	683	622	560	498	436
	Med-Low	1065	1003	941	879	817	755	694	632	570	508	446	384	323
	Low	951	889	827	766	704	642	580	518	456	395	333	271	209
3 Ton	**Total Static**	**0.1**	**0.2**	**0.3**	**0.4**	**0.5**	**0.6**	**0.7**	**0.8**	**0.9**	**1**	**1.1**	**1.2**	**1.3**
Speed Tap	High / ECM	1574	1512	1450	1389	1327	1265	1203	1141	1079	1018	956	894	832
	Med-High	1461	1399	1337	1275	1213	1151	1090	1028	966	904	842	780	719
	Med	1347	1285	1223	1162	1100	1038	976	914	852	791	729	667	605
	Med-Low	1234	1172	1110	1048	986	924	863	801	739	677	615	553	492
	Low	1120	1058	996	935	873	811	749	687	625	564	502	440	378
3.5 Ton	**Total Static**	**0.1**	**0.2**	**0.3**	**0.4**	**0.5**	**0.6**	**0.7**	**0.8**	**0.9**	**1**	**1.1**	**1.2**	**1.3**
Speed Tap	High / ECM	1743	1681	1620	1558	1496	1434	1372	1310	1249	1187	1125	1063	1001
	Med-High	1630	1568	1506	1444	1382	1321	1259	1197	1135	1073	1011	950	888
	Med	1516	1454	1393	1331	1269	1207	1145	1083	1022	960	898	836	774
	Med-Low	1403	1341	1279	1217	1155	1094	1032	970	908	846	784	723	661
	Low	1289	1227	1166	1104	1042	980	918	856	795	733	671	609	547
4 Ton	**Total Static**	**0.3**	**0.4**	**0.5**	**0.6**	**0.7**	**0.8**	**0.9**	**1**	**1.1**	**1.2**	**1.3**	**1.4**	**1.5**
Speed Tap	High / ECM	1789	1727	1665	1603	1541	1480	1418	1356	1294	1232	1170	1109	1047
	Med-High	1675	1613	1552	1490	1428	1366	1304	1242	1181	1119	1057	995	933
	Med	1562	1500	1438	1376	1314	1253	1191	1129	1067	1005	943	882	820
	Med-Low	1448	1386	1325	1263	1201	1139	1077	1015	954	892	830	768	706
	Low	1335	1273	1211	1149	1087	1026	964	902	840	778	716	655	593
5 Ton	**Total Static**	**0.3**	**0.4**	**0.5**	**0.6**	**0.7**	**0.8**	**0.9**	**1**	**1.1**	**1.2**	**1.3**	**1.4**	**1.5**
Speed Tap	High / ECM	2127	2065	2003	1941	1880	1818	1756	1694	1632	1570	1509	1447	1385
	Med-High	2013	1952	1890	1828	1766	1704	1642	1581	1519	1457	1395	1333	1271
	Med	1900	1838	1776	1714	1653	1591	1529	1467	1405	1343	1282	1220	1158
	Med-Low	1786	1725	1663	1601	1539	1477	1415	1354	1292	1230	1168	1106	1044
	Low	1673	1611	1549	1487	1426	1364	1302	1240	1178	1116	1055	993	931

APPENDIX H: HEAT PUMP TEMPERATURE SPLIT CHART

R-410A Minimum Expected Temperature Split (Supply - Return)

Outdoor Temp.	CFM/TON															
	300	310	320	330	340	350	360	370	380	390	400	410	420	430	440	450
5	13.0	12.6	12.2	11.8	11.4	11.0	10.8	10.6	10.4	10.2	10.0	9.8	9.6	9.4	9.2	9.0
7	13.8	13.4	13.0	12.6	12.2	11.8	11.6	11.3	11.1	10.8	10.6	10.4	10.1	9.9	9.6	9.4
9	14.6	14.2	13.8	13.4	13.0	12.6	12.3	12.0	11.8	11.5	11.2	10.9	10.6	10.4	10.1	9.8
11	15.4	15.0	14.6	14.2	13.8	13.4	13.1	12.8	12.4	12.1	11.8	11.5	11.2	10.8	10.5	10.2
13	16.2	15.8	15.4	15.0	14.6	14.2	13.8	13.5	13.1	12.8	12.4	12.0	11.7	11.3	11.0	10.6
15	17.0	16.6	16.2	15.8	15.4	15.0	14.6	14.2	13.8	13.4	13.0	12.6	12.2	11.8	11.4	11.0
17	17.6	17.2	16.8	16.4	16.0	15.6	15.2	14.8	14.4	14.0	13.6	13.2	12.8	12.4	12.0	11.6
19	18.2	17.8	17.4	17.0	16.6	16.2	15.8	15.4	15.0	14.6	14.2	13.8	13.4	13.0	12.6	12.2
21	18.8	18.4	18.0	17.6	17.2	16.8	16.4	16.0	15.6	15.2	14.8	14.4	14.0	13.6	13.2	12.8
23	19.4	19.0	18.6	18.2	17.8	17.4	17.0	16.6	16.2	15.8	15.4	15.0	14.6	14.2	13.8	13.4
25	20.0	19.6	19.2	18.8	18.4	18.0	17.6	17.2	16.8	16.4	16.0	15.6	15.2	14.8	14.4	14.0
27	20.6	20.2	19.8	19.4	19.0	18.6	18.2	17.7	17.3	16.8	16.4	16.0	15.6	15.2	14.8	14.4
29	21.2	20.8	20.4	20.0	19.6	19.2	18.7	18.2	17.8	17.3	16.8	16.4	16.0	15.6	15.2	14.8
31	21.8	21.4	21.0	20.6	20.2	19.8	19.3	18.8	18.2	17.7	17.2	16.8	16.4	16.0	15.6	15.2
33	22.4	22.0	21.6	21.2	20.8	20.4	19.8	19.3	18.7	18.2	17.6	17.2	16.8	16.4	16.0	15.6
35	23.0	22.6	22.2	21.8	21.4	21.0	20.4	19.8	19.2	18.6	18.0	17.6	17.2	16.8	16.4	16.0
37	24.0	23.6	23.1	22.7	22.2	21.8	21.2	20.6	20.0	19.4	18.8	18.4	18.0	17.6	17.2	16.8
39	25.0	24.5	24.0	23.6	23.1	22.6	22.0	21.4	20.8	20.2	19.6	19.2	18.8	18.4	18.0	17.6
41	26.0	25.5	25.0	24.4	23.9	23.4	22.8	22.2	21.6	21.0	20.4	20.0	19.6	19.2	18.8	18.4
43	27.0	26.4	25.9	25.3	24.8	24.2	23.6	23.0	22.4	21.8	21.2	20.8	20.4	20.0	19.6	19.2
45	28.0	27.4	26.8	26.2	25.6	25.0	24.4	23.8	23.2	22.6	22.0	21.6	21.2	20.8	20.4	20.0
47	29.2	28.5	27.8	27.2	26.5	25.8	25.2	24.6	24.0	23.4	22.8	22.4	21.9	21.5	21.0	20.6
49	30.4	29.6	28.9	28.1	27.4	26.6	26.0	25.4	24.8	24.2	23.6	23.1	22.6	22.2	21.7	21.2
51	31.6	30.8	29.9	29.1	28.2	27.4	26.8	26.2	25.6	25.0	24.4	23.9	23.4	22.8	22.3	21.8
53	32.8	31.9	31.0	30.0	29.1	28.2	27.6	27.0	26.4	25.8	25.2	24.6	24.1	23.5	23.0	22.4
55	34.0	33.0	32.0	31.0	30.0	29.0	28.4	27.8	27.2	26.6	26.0	25.4	24.8	24.2	23.6	23.0
57	34.8	33.8	32.8	31.8	30.8	29.8	29.2	28.5	27.9	27.2	26.6	26.0	25.4	24.8	24.2	23.6
59	35.6	34.6	33.6	32.6	31.6	30.6	29.9	29.2	28.6	27.9	27.2	26.6	26.0	25.4	24.8	24.2
61	36.4	35.4	34.4	33.4	32.4	31.4	30.7	30.0	29.2	28.5	27.8	27.2	26.6	26.0	25.4	24.8
63	37.2	36.2	35.2	34.2	33.2	32.2	31.4	30.7	29.9	29.2	28.4	27.8	27.2	26.6	26.0	25.4
65	38.0	37.0	36.0	35.0	34.0	33.0	32.2	31.4	30.6	29.8	29.0	28.4	27.8	27.2	26.6	26.0

Source: http://www.bpa.gov/EE/Sectors/Residential/Documents/HP_Temp_Split_Table.pdf