ROCKY MOUNTAIN POWER

Let's turn the answers on.

Home Energy Savings Program

Idaho Participating Weatherization Trade Ally Program Manual

Version 2.0
Release Date – April 14, 2014

Table of Contents

Glossary

HES	Home Energy Savings
RMP	Rocky Mountain Power
QPL	Qualified Products List
Electric Heat	Permanently installed, ducted system consisting of an electric furnace, heat pump or electric zonal heating system (baseboard or ceiling/wall heaters) serving as the home's current primary heat source (space heaters do not qualify)
Electric Cooling	Permanently installed, electric heat pump or ducted electric central air conditioner serving as the home's current primary cooling source. Room air conditioners and evaporative cooler do not qualify
Finished or Conditioned Living Space	Living space that has a permanently installed heating or cooling system
Non-Electric Heat	Heating system with gas, oil, or propane serving as the home's current primary heat source
Unconditioned Living Space	Spaces that exist outside of the home's thermal boundary (e.g. garages, crawlspaces, the exterior of the home, or potentially the basement)

Version History

2.0	All	April 14, 2014	Updated incentives and requirements to align with the April 2014 tariff update. Removed general program participation information.

Rocky Mountain Power's HES program will update this trade ally manual periodically.

Purpose of This Manual

This manual is meant to provide trade allies with a comprehensive overview of Rocky Mountain Power's Home Energy Savings program. It has been developed with a companion set of reference materials and applicable worksheets to assist trade allies with the installation of program-approved equipment and services.

Home Energy Savings Overview

The RMP HES program offers cash incentives on a variety of HVAC and weatherization equipment and services. The program promotes installation practices that are designed to maximize system performance and efficiency. By helping customers minimize their energy use, the HES program saves customers money on their energy bill and also reduces the growing demand for power in the region.

The program was originally designed for single family installation. However, due to increased interest in multi-family[i] and manufactured home installations, the program has extended incentives for each category in select states, each involving its own unique application process. For multi-family projects, please refer to the Rocky Mountain Power Trade Ally Manual and contact the program at 1-800-942-0281 or HesTradeAllyPMP@rockymountainpower.net for additional requirements or to make an appointment for a pre-qualification inspection. Please refer to the HES website at homeenerysavings.net for additional requirements regarding manufactured home incentives.

Trade Ally Overview

A trade ally is a contractor (general, HVAC, weatherization, or plumber) or retailer who sells or installs qualifying equipment or performs services for home energy efficiency upgrades. There are two types of program trade allies: participating or qualifying.

Participating trade allies:
Participating applies to a trade ally that has met the basic requirements (outlined on the next pages) to perform work for the HES program.

Qualified trade allies:
Qualified applies to a trade ally that has met the basic requirements (outlined in the next pages) and that has also successfully completed additional relevant industry training(s) required for specific services (e.g. PTCS, BPI, NATE, etc.). Documentation of the completed training must be submitted with the participation agreement and must include the name of the individual trained, certification number, certification type, date trained, and expiration date (if applicable). For additional information on relevant industry trainings and certifications, please refer to the state's HVAC or Weatherization trade ally manuals. If you or your technicians require additional training in order to meet program requirements, please let us know and we will work with you to identify appropriate local resources or provide on-site technical coaching.

[i] 5 or more attached units with shared floors and/or walls

Program-Eligible trade allies:
The term "program-eligible trade ally" is used when an installation can be completed by either a participating or qualified trade allies. This term is used on HES marketing materials and the website to explain to customers what type of trade ally they need to hire in order to receive an incentive.

ID Weatherization Trade Ally Requirements		
Equipment or Service	**Trade Ally Type**	**Additional Qualifications**
Insulation (Attic, Floor, Wall)	Program-Eligible Trade Ally	None
Windows	Program-Eligible Trade Ally	None

Existing Single Family Homes Incentives

Attic Insulation	Wall Insulation	Floor Insulation
Trade Ally Installed: **Electrically Heated Home Customer Incentive:** $0.50/sq. ft. **Electrically Cooled Home Customer Incentive:** $0.15/sq. ft.	*Trade Ally Installed:* **Electrically Heated Home Customer Incentive:** $0.65/sq. ft. **Electrically Cooled Home Customer Incentive:** $0.30/sq. ft.	*Trade Ally Installed:* **Electrically Heated Home Customer Incentive:** $0.50/sq. ft. **Electrically Cooled Home Customer Incentive:** N/A. Electric cooling is not sufficient to meet the requirement for a floor insulation incentive
Homeowner Self-Installed: **Electrically Heated Home Customer Incentive:** $0.25/sq. ft. **Electrically Cooled Home Customer Incentive:** $0.15/sq. ft.	*Homeowner Self-Installed:* N/A. Incentives are not offered to homeowners self-installing wall insulation	*Homeowner Self-Installed:* **Electrically Heated Home Customer Incentive:** $0.25/sq. ft. **Electrically Cooled Home Customer Incentive:** N/A. Electric cooling is not sufficient to meet the requirement for a floor insulation incentive
Qualifications: • Existing insulation: R-20 or less • Final insulation: R-49 or greater	**Qualifications:** • Existing insulation: R-4 or less • Final insulation: R-13 or fill cavity	**Qualifications:** • Existing insulation: R-18 or less • Final insulation: R-30 or greater

Ensure the home qualifies:

- Work must be completed by a program-eligible trade ally or self-installed by the homeowner
- Must be an existing home, not new construction
- An electric heating system or electric cooling system must serve at least 80% of the home's conditioned floor area
- Insulation must be installed between conditioned and unconditioned space
- Work must be performed in accordance with specifications outlined on page 8
- Incentives are limited to one insulation incentive per type (attic, wall, or floor) for the lifetime of the home

Application:

- **Insulation Application**– completed and signed

Itemized receipt or invoice:

- Date of purchase (self-installations)
- Date work initiated
- Date work completed
- Product and/or service description and costs

Additional Documents:

- W-9 for businesses and non-individual customers receiving an incentive
- Third party addendum for property owners who are not listed on the utility account and who are applying for an incentive

Existing Single Family Homes Incentives Continued

Windows

Tier 1 Electrically Heated Homes Customer Incentive: $1.50/sq. ft.

Tier 2 Electrically Heated Home Customer Incentive: $3.00/sq. ft.

Requirements:

- Tier 1: U-Factor 0.30 or lower
- Tier 2: U-Factor 0.22 or lower

Ensure the home qualifies:

- Work must be completed by a program-eligible trade ally or self-installed by the homeowner
- Must be an existing home, not new construction
- An electric heating system must serve at least 80% of the home's conditioned floor area
- Work must be performed in accordance with specifications outlined on page 34
- One incentive will be paid per measure for the lifetime of the home
  - Replacement window units that have previously received an incentive do not qualify
- Exterior doors will be considered for the incentive if they are 80% glass
- Skylights will be considered for the incentive if all the above program requirements are met
- Work performed as part of Idaho building code requirements are not eligible for the incentive
- Areas that are not finished or conditioned living spaces (i.e. garages) do not qualify

Application:

- **Windows Application**– completed and signed

Itemized receipt or invoice:

- Product and/or service description and costs
- Quantity of windows
- Dimensions of each window
- Date of purchase
- Date work initiated
- Date work completed

Additional Documents:

- **Manufacturer's specifications sheet or NFRC stickers for each window**
- W-9 for businesses and non-individual customers receiving an incentive
- Third party addendum for property owners who are not listed on the utility account and who are applying for incentives

Existing Single Family Homes Incentives Continued

Super Bundle

Electrically Heated Home Customer Incentive: $500

Electrically Cooled Home Customer Incentive: $200 *($1,000 cap on total combined incentives)*

Super Bundle Qualifications:

- All requirements for individual incentives must be met and standard incentives will be paid on approved individual measures
- Additional bonus incentives will be paid after all individual incentives are approved
- All individual incentive applications and associated required documentation must be submitted as one package at the same time

Electrically Heated Home Qualifications:

- Option 1: Heat Pump Upgrade with Best Practices Installation and Proper Sizing, Attic Insulation, and Duct Sealing and Duct Insulation
- Option 2: Heat Pump Conversion, Heat Pump Best Practices Installation and Proper Sizing, Attic Insulation, and Duct Sealing and Duct Insulation
- Option 3: Ductless Heat Pump and Attic Insulation
- Option 4: Ground Source Heat Pump Upgrade, Attic Insulation, and Duct Sealing and Duct Insulation
- Option 5: Ground Source Heat Pump Conversion, Attic Insulation, and Duct Sealing and Duct Insulation

Electrically Cooled Home Qualifications:

- Option 1: 95% Gas Furnace with ECM, Central Air Conditioner, Attic Insulation, and Duct Sealing and Duct Insulation

Provide all applications, receipts/invoices, and other required documentation as a single packet for the measures being bundled.

Insulation Specifications

RESIDENTIAL WEATHERIZATION SPECIFICATIONS

August 30, 2011

Index to Sections

I. GENERAL SPECIFICATIONS

1. These specifications apply to existing residential (retrofit) weatherization for electrically heated single family homes, manufactured homes, and multi-family buildings that are three floors or fewer above grade.
2. Weatherization measures shall be installed in accordance with these specifications, all applicable State and local codes, HUD code, and federal regulations. In cases where a federal, state or local code or regulation exceeds the requirements herein, that code or regulation shall apply. If the federal, state or local code or regulation does not exceed the requirements herein, then the requirements contained in this specification shall apply.
3. An inspector or representative of the utility (who has demonstrated competency of understanding these specifications through successful passing of an approved written test) shall inspect projects to verify and document projects comply with these specifications.
4. All weatherization shall be completed in a manner that will provide a safe, permanent, effective, and professional installation.
5. Insulation shall be installed in areas of the envelope that separate conditioned space and unconditioned or outside spaces where none exists or where R-value is less than that described in the measure description of the reporting software.
6. In manufactured homes, all combustion appliances, except gas cooking appliances and gas clothes dryers, shall have outside combustion air ducted directly to the appliance. Fireplaces and wood-burning stoves shall have tight-fitting glass or metal doors that cover the entire opening of the firebox. All dryer ducts must be vented to the outside to control moisture.
7. Whole House Mechanical Ventilation Compliance, see Section MV, is required where whole house air sealing is installed as a program measure. Whole house air sealing as a measure includes a pre and post blower door test, and a measurement of building tightness. Prescriptive air sealing as a part of insulation measures is not considered air sealing as a program measure. Where weatherization does not consist of whole house air sealing, determination of whole house mechanical ventilation rates can be omitted (i.e. no blower door test required) if all existing spot ventilation systems are in good working order (i.e. meet the ducting specs; see Section MV).
8. All homes that have any weatherization measures installed shall receive:
    a) *Care for Your Air: A Guide to Indoor Air Quality*, *EPA*
    b) *Indoor Air Quality Homeowner Disclosure Form*

II. GENERAL MATERIAL SPECIFICATIONS

1. Materials used shall meet or exceed applicable local, state and federal codes and regulations. All materials shall be installed in accordance with manufacturer's instructions.
2. All materials shall be resistant to corrosion, degradation from ultraviolet light, and be compatible with other elements and materials (e.g. will not react chemically, etc.) so as to enhance long life expectancy of installed measures.
3. Structural members and building components shall be free of decay and structurally sound before the weatherization measure is installed.
4. Weatherization materials, products and labor shall be warranted by the Installer against failure due to manufacturing and installation defects for a period of at least 2 years, from the installation date, except that sealed, insulated-glass units shall be warranted against failure of the seal for a minimum of 5 years. The Installer shall provide a written warranty, with the installation date, to the Homeowner or Homeowner Designee. Manufacturers' written warranties may be used by Installers to satisfy a part of this requirement where appropriate.
5. The American Society of Heating, Refrigeration, and Air Conditioning Engineers (ASHRAE) Handbook of Fundamentals is the accepted standard for R-value/U-factor of materials used by Installers. Products that vary from ASHRAE may be acceptable if they comply with current Federal Trade Commission (FTC) certifications, testing and labeling rules, and have independent laboratory testing which indicates the product's R–value/U-factor. The National Fenestration Rating Council (NFRC) Certified Products Database (CPD) shall be used to determine U-factors for windows and doors.
6. All materials used for thermal insulation shall meet the requirements contained in the applicable material specifications listed below. Certain requirements in these specifications refer to voluntary standards such as ASTM International (astm.org) for specific test methods or physical properties. For purposes of compliance with this weatherization specification, the referenced voluntary standard shall be considered as mandatory.

a) Mineral Fiber Blankets/Batts	ASTM C 665
b) Mineral Fiber Loose Fill	ASTM C 764
c) Cellulose Loose Fill	ASTM C-739
	FR 1209
	CFR 1404
d) Perlite	ASTM C-549
e) Vermiculite	ASTM C-516-96e1
f) Polystyrene Board	ASTM C-578
g) Polyurethane and Polyisocyanurate Board	ASTM C 591

7. Insulation materials including facings (except foam plastic insulation—see Specification II-8) shall be installed in accordance with requirements of the International Building Code (IBC) flame spread and smoke developed. Requirements do not apply to facings, provided that the facing is installed in substantial contact with the unexposed surface of the ceiling, floor or wall finish.
8. Installation of foam plastic insulation shall comply with thermal and ignition barrier code requirements for "foam plastics," as defined by the local building code. Spray or injected foam insulation shall be installed by a manufacturer recognized (or other equivalently trained) licensed trade ally.
9. All insulation materials installed shall meet the requirements of the Federal Trade Commission Labeling Rule (16 CFR 460).
10. Caulking shall be one of the following materials conforming to the federal specifications listed below or material demonstrating equivalent performance in resiliency and durability. The cartridge or tube containing the caulking material shall be labeled indicating conformance to the applicable federal specification:

a.	Silicone Rubber	TT-S-1543A
b.	Polysulfide or Polyurethane (single component)	TT-S-230C
c.	Polysulfide or Polyurethane (multiple component)	TT-S-227E
d.	Acrylic Terpolymer (single component)	TT-S-230C
e.	Butyl Rubber	TT-S-1657
f.	Acrylic Latex	ASTM C834

11. Installer Record

    The Installer of any measure covered by this specification manual shall provide a copy to the utility, and permanently post, an Installer Record, at the electrical panel or circuit box or other location approved by the homeowner as a record of work performed, containing the following information as applicable:

    a) Residence address.
    b) Installation date.
    c) Name, address and phone number of the Installer.
    d) The building component(s) that have been insulated: ceilings, walls, floors, pipes, or ductwork, etc.
    e) The square footage of each of the areas insulated.
    f) The estimated R-value of any pre-existing insulation.
    g) The area (plus bag count if applicable), added R-value, depth and type (including product name) of insulation installed.
    h) The final R-value of insulation.

i) A label or chart for any loose-fill insulation showing R-value per inch or R-value at installed depth.

j) Any air sealing that was completed, with final whole house leakage test results if applicable. List primary areas or building components that were air sealed.

k) Any duct sealing that was completed, with final duct leakage test results if applicable. List areas with ductwork that were sealed.

l) List rough opening area or dimensions of any new windows and doors that were installed, and U-factors of each window and door.

List and describe any new fans or mechanical ventilation systems installed, including design airflow rate and control strategy.

III. General Weatherization Requirements

1. Human Contact Areas

Fibrous insulation installed in human contact areas shall be covered with a vapor permeable air barrier (i.e. house wrap, foam board, plywood, gypsum board) to limit human exposure to insulation fibers. Vertical and overhead surfaces containing fibrous insulation, in areas that are routinely accessed by building occupants, shall also be covered. All covering shall meet applicable codes.

2. Electrical Wiring

a) Insulation shall not be installed in contact with active knob and tube wiring.

b) For all types of electrical wiring, all electrical splices, junctions, connections, fixtures and switches must be contained in code compliant and covered electrical boxes prior to being covered with insulation.

3. Combustion Appliance Exhaust Ventilation Inspection <u>(May not apply if windows are the sole weatherization measure installed; this decision will be made at program discretion)</u>

a) Combustion heating and water heating systems shall be visually inspected at accessible locations for signs of improper venting and to observe that combustion vent flue terminates outdoors. Visual inspections shall be documented by trade ally.

b) Repairs shall be made prior to project completion to assure that exhaust venting at accessible locations is continuously connected between the appliance and outdoors ending in a code approved vent cap.

c) Homeowners shall be notified of signs of improper venting, damaged venting, corrosion or deterioration of equipment or venting system and encouraged to contact a heating or water heating trade ally or fuel utility for further inspection.

d) Gas clothes dryers shall be vented to outside.

e) Homes with unvented combustion heating appliances are not eligible.

4. Carbon Monoxide Detectors

All Carbon Monoxide Detectors shall:

a) Be Underwriters Laboratories Tested and Listed to ANSI/UL 2034-09

b) Include an electrochemical sensor

c) Be powered by long-life lithium type battery

d) Include a digital readout that automatically displays the current CO level detected when an alarm signal is activated

e) Include a data feature which is activated when the test/reset or memory button is pressed, and the readout shall include the current CO level detected down to 10 parts per million (ppm), the highest level detected down to 10 ppm, and for how long the peak level was detected

Locked Battery Compartment

a) Battery shall be factory pre-installed within a compartment which has a separate battery door that is locked closed with a tamper-resistant screw

b) Battery compartment shall not be accessible without removing alarm from its mounting

Five-Year Warranty

CO detector manufacturer shall warrant alarm and sensor for minimum 5 years, and shall guarantee that battery provided will power alarm for minimum 5 years without replacement

Installation Requirements

a) CO detector shall be installed in all family living units containing a permanently installed combustion appliance.

b) CO detector installed in accordance to manufacturer installation instructions

c) Detector shall not be installed within unconditioned space, furnace closet or garage

Occupant Education

a) The CO detector shall be tested upon completion of installation, and the occupant shall be instructed how to operate, test and maintain the alarm

b) The occupant shall be instructed how to properly respond to an alarm signal

c) The occupant shall be provided with the manufacturer's owner's manual

AR.1. Attic and Roof Insulation

1. Duct Insulation, Duct Sealing and Air Sealing

Accessible gaps and penetrations between conditioned space and attic space shall be sealed in compliance with Section AS – Air Sealing.

All accessible ducts in unconditioned attic areas shall be sealed, supported, mechanically fastened, and insulated in compliance with Section D.1. – HVAC Duct Insulation & Sealing when installing attic insulation.

2. Attic Preparation and Debris

Degradable and absorbent scrap materials, especially wood and cardboard, shall be removed from the attic. The roof and attic shall free from water leaks and moisture damage prior to performing work.

3. Baffles for Eave and Soffit Vents

Eave and soffit vents shall be baffled to prevent air movement through the insulation and blockage of the vent; all insulation types shall comply with this requirement. Baffles shall maintain an opening equal to or greater than the size of the vent. Baffles shall be fastened to roof rafters with no less than 9/16-inch galvanized staples or roofing nails.

Baffles shall be rigid and air impermeable. All baffles shall extend at least 4 inches above the final level of insulation.

Where a continuous soffit vent exists, baffles shall be installed equally spaced along the length of the soffit and allow sufficient Net Free Area (NFA) of ventilation. Unbaffled bays that open to a soffit shall be blocked and sealed with a rigid moisture-resistant material so blown product is not able to enter soffit.

Baffle shall be installed far enough into the bay to reach the exterior side of the top plate.

4. Dams

Dams shall be installed between insulated and uninsulated areas, such as garages, covered porches and along the upper edge where ceilings differ in height, to keep loose-fill insulation from falling over the edge. To build dams, use batt-type insulation laid flat, with an R-value equal to that in the attic. The batt shall be at least 14-1/2 inches wide. Other acceptable dam materials would be plywood, rigid foam board or moisture-resistant cardboard. See specifications for damming attic accesses. Sloughing is not permitted.

5. Exhaust Ventilation Ducts & Dryer Ducts

Exhaust ventilation ducts and dryer ducts located in the attic shall comply with requirements in Section MV – Mechanical Ventilation.

6. Installation

a) Ceilings shall be insulated to a minimum of R-38 or the highest R-value approaching R-38 which is practical.

b) Uninsulated sloped ceilings between ventilated attics shall be insulated where practical. Airflow shall be maintained over the sloped-ceiling insulation by tubes, baffles, or by using rigid insulation; or the sloped-ceiling area may be insulated to the full cavity depth where local codes allow, provided installation meets requirements in Section 19 – Unvented Vaulted Ceilings insulation requirements.

c) If exposed water pipes are located in the attic space, water pipe shall be insulated for freeze protection as specified in Section HW Hydronic and Water Pipe Insulation.

d) Enclosed attics and enclosed rafter spaces shall have cross ventilation for each separate space. Ventilating openings shall be protected against the entrance of rain and snow.

The net free-ventilating area shall be not less than 1/150 of the area of the space ventilated, except that the area may be 1/300, provided no more than 60% of the required ventilating area is provided by ventilators located in the upper portion of the space to be ventilated.

If an attic vent is used as an exhaust duct termination it shall not be included in passive attic vent area calculations.

Vent openings shall be covered with corrosion-resistant metal mesh with mesh openings of maximum 1/4 inch in dimension.

The vent area shall be the NFA, defined as the actual open area of the vent after subtracting any area blocked by screens or louvers. All vents shall be screened.

Air turbines shall not be installed in order to meet the ventilation requirements of these specifications; however, ventilating area of existing air turbines may be included by estimating the net free ventilating area of the air turbine in a locked, non-rotating position.

e) The UL label or equivalent label shall appear on every bag of loose fill cellulose material. It shall include the file number (R-number) of the manufacturer and the issue number for labels purchased. This ensures adherence to the requirements of CPSC cellulose regulation 16 CFR 1209 (i.e., critical radiant flux, smoldering combustion, settled density, and corrosiveness).

7. Baffles for Light Fixtures, Fan/Lights, Fan/Heaters, Chimneys and Miscellaneous Heat Producing Fixtures

a) Only fluorescent fixtures with rated thermal protection shall be covered with insulation.

b) Recessed lighting fixtures and other heat producing fixtures that are Type-IC (Insulation Contact) rated by UL may be covered with insulation.

c) Non-combustible baffles attached to the ceiling structure shall be used to maintain a 3" clearance around the perimeter of recessed lighting fixtures and other heat producing fixtures that are not Type-IC rated. Insulation shall not be installed directly above recessed lighting fixtures and heat producing combinations that are not Type-IC rated

d) All combustible insulation materials, including existing insulation, shall be kept a minimum of 2 inches from metal flues and masonry chimneys. Non-combustible insulation (per ASTM E-136) may be installed with no clearance around flues and chimneys if permitted by local or State fire code. However, if the flue is a single wall type (i.e., made from a single thickness of rolled sheet metal) then, a 2-inch air clearance to all insulating materials shall be maintained.

e) Air sealing of all items referenced in this section shall be addressed as listed in Section AS Air Sealing and Testing.

8. Vapor Retarders

a) If a vapor retarder is present, it shall be in contact with the surface between attic and conditioned space.

b) New insulation with a vapor retarder shall not be installed on top of existing insulation.

9. Water Pipes in Attics

Water pipes located in the attic shall be insulated to meet requirements in Section HW – Hydronic and Water Pipe Insulation.

10. Interior Attic Access Doors

a) Weather-stripping shall be permanently attached to create an effective air seal between the attic access frame and the door. Accesses with air leaks that cannot be weather-stripped shall be repaired or replaced prior to insulating. Ceiling accesses shall be insulated to at least R-30 with batt-type or rigid insulation. Alternatively, R-5 or greater rigid insulation installed between the access cover and a rigid protective material (Plywood or other durable rigid material) attached over the entire insulation area is allowed. Insulation must be sealed around the perimeter to the access cover using caulk, adhesive or spray foam. Access cover assembly must be tightly sealed using weather stripping around the entire perimeter.

b) Batt-type insulation shall be attached to the door with twine. The twine shall be stapled to the edges of the door. Stapling the insulation directly to the door is unacceptable. Fibrous insulation must be covered with a vapor permeable air barrier material.

c) Attic accesses shall be protected from having loose-fill insulation fall through the opening. The full level of ceiling insulation shall be maintained to the edge of the attic access opening by one of the following methods:

I. The opening may be framed with wood or plywood boards. The framing shall be permanently attached and extend at least 4 inches above the final level of insulation. **Cardboard or foamboard are not acceptable for attic access damming.**

II. A minimum 14-1/2-inch wide insulation batt laid flat, with an R-value equal to that specified for the attic, may be placed tightly around the perimeter of the access opening. This 14-1/2 inches shall be maintained in all outward directions from the access opening, including corners. Scoop out all loose-fill insulation from the edges before laying batts.

11. Pull-Down Stairs

Pull-down stairs in heated areas shall be weather-stripped and insulated to a minimum of R-10. Insulation and weather-stripping shall be installed to allow easy operation of the stairs. Factory or site-built pull-down stair covers shall have a minimum R-10. New pull-down stair assemblies with a minimum R-5 insulation rating will be permitted provided the insulation is between conditioned space and the attic stair assembly and gaskets or weather-stripping prevent air infiltration.

12. Exterior Attic Access Doors

Any outside access shall have a door that is constructed for continuous exposure to exterior conditions.

13. Walls in Attic Areas

a) All walls separating attics and conditioned space shall be insulated in order to maintain a consistent thermal boundary separating conditioned and unconditioned spaces as part of attic insulation.

b) All penetrations through the wall shall be sealed with caulk or foam. Knee wall and skylight wall insulation shall be installed prior to installing ceiling insulation. Knee walls and skylight walls shall be insulated to a minimum of R-13 in a 2x4 cavity, and R-21 in a 2x6 cavity. When adding new insulation

over existing insulation, the cavity shall be completely filled. Do not install new insulation with a vapor retarder on top of pre-existing insulation.

c) Wall insulation inside attics, whether new or pre-existing, shall be covered with a durable, vapor permeable air barrier material to prevent air penetration of the insulation, and to ensure that the insulation is held in full contact with the wall cavity. The air barrier material shall be permanently fastened so that it supports the knee wall insulation.

d) Knee wall accesses shall be insulated to R-13 and weather-stripped to create an effective air seal. If side attic area is used for storage, fibrous knee wall door insulation shall be covered to prevent human contact. Foam core doors with a minimum R-5 insulation rating (manufactured for exterior use) and used in knee wall access door installations will be permitted, provided gaskets or weather-stripping prevents air infiltration around the entire door perimeter.

14. Installing Loose-Fill Insulation

Loose-fill insulation shall be installed in contact with the surface between the conditioned space and attic with a uniform R-value. The number of bags used to attain the added R-value shall match manufacturer's estimated bag count. Baffles and dams shall be in place prior to installing loose-fill insulation.

15. Installing Batt-Type Insulation

Batts shall be installed in contact with the surface between the conditioned space and attic, cut to fit, placed tightly together with no gaps except those required for clearance around heat-producing fixtures. Compression at eave line is allowed. Where practical, place one layer of batts between the joists and another layer of batts on top of the first layer and at right angles to the joists or offset to cover the seams of the first layer. Baffles and dams shall be in place prior to installing batt-type insulation.

16. Installing Foam Insulation

In an open attic flat, sloped cavity or attic knee walls, both spray or rigid foam are acceptable types of insulation, provided

a) they meet the requirements for R-value;

b) are installed in contact with the surface between attic and conditioned space;

c) comply with thermal and ignition barrier code requirements for "foam plastics," as defined by the local building code.

17. Floored Attics

a) Cavities below decked storage areas above conditioned space shall be insulated to the highest practical level.

b) Insulation shall be installed under the boards of floored attics. To fill the cavities, the boards can be lifted or holes can be drilled into them no more than 4 feet apart. If loose-fill insulation is used, joist cavities shall be tightly packed with insulation.

c) Areas with loose-fill insulation next to a floored attic shall be dammed to prevent insulation from falling onto the floored attic.

18. Vented Vaulted Ceilings

If insulation is added to a vented vaulted ceiling, a 1-inch air space shall be maintained above the insulation. Each cavity shall have an upper and lower vent.

19. Unvented Vaulted Ceilings

Unvented vaulted ceilings are allowed using:

a) Tightly packed fibrous insulation (i.e. fiberglass, cellulose, etc) provided all applicable requirements in Section AR.1. are met and all of the following conditions are met:

   I. The insulated vaulted ceiling is less than 8 feet in length

   II. The insulated vaulted ceiling is located between upper (peak) and lower (rake) ventilated attic spaces provided containment materials used at the lower and upper cavity openings allow for rapid vapor diffusion

   III. A continuous and seamless air barrier is located between the conditioned space and insulation

   IV. All recessed fixtures in the insulated assembly shall be UL rated for Insulation Contact Air-Tight (ICAT)

   V. Each unconditioned attic area shall be provided with venting

b) Air-impermeable insulation (i.e. spray foam or other material as defined in International Residential Code) provided all applicable requirements in Section AR.1. are met and all of the following conditions are met:

   I. Installation meets all manufacturer installation requirements and all requirements listed in product specific ICC-Evaluation Service Report

   II. Full program required R-value shall be installed where space allows

   III. Air-impermeable insulation shall be a vapor retarder or shall be installed in contact with a separate vapor retarder that is in direct contact with the underside of the insulation

   IV. All recessed fixtures in the insulated assembly shall be UL rated for ICAT

   V. Each unconditioned attic area shall be provided with venting

20. Interior Roof Insulation

a) The installation of interior roof insulation shall comply with Section 19b.

b) Roofs shall be insulated to a minimum of R-24 or the highest R-value approaching R-24 which is practical.

c) An in-progress inspection shall be performed by the Utility after the rigid board has been installed and prior to covering the insulation to verify the insulation board is properly installed and sealed. The in-progress inspection shall be documented in the house permanent file. Utility may allow photographs in lieu of an in-progress inspection.

21. Exterior Roof Insulation

a) Roofs shall be insulated to a minimum of R-20 or the highest R-value approaching R-20 which is practical.

b) Insulation shall not be applied to roofs over ventilated cavities. (e.g., vaulted ceilings with ventilated spaces, attics, sloped ceilings connected to attics and/or knee wall spaces, etc.) Ventilated cavities of flat or sloping roofs shall not be blocked.

c) Insulation shall be in a rigid board form.

d) Roof drainage systems shall function after insulation is installed.

e) Recessed lights in insulated cavities shall be Insulation Contact and Air Tight (ICAT) rated.

f) All penetrations through the roof covering and all joints between the roof covering and vertical surfaces (e.g., walls, chimneys, etc.) shall be flashed and sealed.

g) An in-progress inspection shall be performed by the Utility after the rigid board has been installed and prior to covering the insulation to verify the insulation board is properly installed and sealed. The in-progress inspection shall be documented in the house permanent file. Utility may allow photographs in lieu of an in-progress inspection.

AR.2. MANUFACTURED HOME – CEILING AND ROOF INSULATION

The definition of a manufactured home is "a structure, transportable in one or more sections" and "is built on a permanent chassis and designed to be used as a dwelling with or without a permanent foundation when connected to the required utilities, and includes the plumbing, heating, air-conditioning, electrical systems contained therein" (source: Part 3280, Manufactured Home Construction and Safety Standards, Oct. 1994).

For purposes of this specification, the definition of manufactured homes will also include older homes manufactured in factories and hauled over the road to the home site, and regulated by U.S. Department of Housing and Urban Development (HUD).

1. **General Requirements for Insulating Ceilings and Roofs**

   a) Installation of insulation shall comply with all applicable requirements in Section AR.1. – Attic and Roof Insulation.

   b) Ceiling cavities under flat or crowned metal roofs shall be insulated by completely filling them with blown-in fiberglass insulation and sealing all existing attic ventilation except existing roof jacks. It is recommended that this application be done in conjunction with insulation on the exterior roof surface because of concerns about the potential for moisture condensation.

   c) Ceiling cavities under pitched roofs shall be insulated to R-38 or to the maximum practical R-value, and ventilated to 1 ft^2 for each 300 ft^2 of ceiling area.

   d) All penetrations through the ceiling shall be sealed before ceiling cavities are insulated.

   e) If the ceiling cavity contains a non-ducted return-air system, the return-air system shall be eliminated as described in Section D.2 – Manufactured Home HVAC Duct Insulation & Sealing.

2. **Exhaust Ventilation & Dryer Ducts**

   Exhaust ventilation and dryer ducts located in the attic shall comply with requirements in Section MV – Mechanical Ventilation.

3. **Exterior Roof Surfaces**

   a) If exterior roof insulation is installed, it shall be a minimum of R-7. Exterior roof insulation shall not be installed over ventilated ceiling cavities or over cavities containing air spaces.

   b) Roof drainage systems shall function properly after weatherization has been installed.

   c) Weatherproof roof coverings shall be applied directly over the insulation.

   d) All penetrations through the roof covering and all joints between the roof covering and vertical surfaces (e.g. walls, chimneys, etc.) shall be flashed.

   e) Other methods of installing exterior roof insulation shall be approved by the trade ally in writing prior to beginning the work.

4. **Ramada Roofs**

   a) A ramada roof is a free standing (self supporting) covering over a Mobile Home.

   b) The ramada roof shall be joined to the Mobile Home (per local code) to create an enclosed attic cavity. The ramada roof shall be weatherproof and be joined to prevent the entry of birds, animals, etc.

c) The attic cavity shall meet the ventilation requirements of the site-built specifications.

d) All exhaust-fan ducts, plumbing vent stacks, etc. shall be extended outside and have a termination installed in accordance with local code requirements.

e) Only fluorescent fixtures with rated thermal protection shall be covered with insulation.

f) Fiberglass insulation shall be used for this application. The original roof cap of the Mobile Home shall be opened to allow a full fill of insulation inside the cap. Insulation shall be installed above the original roof to provide an installed level of R-38. The openings in the original roof shall NOT be sealed.

g) All penetrations through the ceiling shall be sealed before the insulation is installed.

FI.1. SITE BUILT – UNDERFLOOR INSULATION

1. Basic Installation Requirements

Insulation shall be installed so that there is no air space between the insulation and the subfloor. Compression of insulation is allowed in order to assure or maintain continuous contact with the bottom of the floor.

2. Duct Insulation, Duct Sealing and Air Sealing

a) Accessible gaps and penetrations between conditioned space and unconditioned underfloor space shall be sealed in compliance with Section AS – Air Sealing.

b) All accessible ducts in unconditioned underfloor spaces shall be sealed, supported, mechanically fastened, and insulated in compliance with Section D.1. – HVAC Duct Insulation & Sealing when installing attic floor insulation.

3. Underfloor Preparation and Debris

a) Degradable and absorbent scrap materials, especially wood and cardboard, shall be removed from the crawlspace. The underfloor shall be free from plumbing and sewer leaks. Moisture damage to building components shall be repaired prior to performing work.

b) If standing water is found in the crawlspace, it shall be drained before the floor is insulated. Chronic bulk water problems must be fixed with a permanent solution before the floor is insulated. Exception: areas subject to uncontrollable routine seasonal/tidal saturation may be allowed by utility.

4. Exhaust Ventilation & Dryer Ducts

Exhaust ventilation and dryer ducts located in the underfloor areas shall comply with requirements in Section MV – Mechanical Ventilation.

5. Inside Access Doors for Underfloor Areas

a) Any crawlspace access door adjacent to a conditioned space shall be insulated to at least R-25 for horizontal openings and to at least R-13 for vertical openings. Insulation shall be securely fastened to access doors using staples and twine or a similar method that ensures the effectiveness and durability of the insulation. Insulation shall cover the maximum possible area of the access door without impeding door operation. Insulation must be covered with a vapor permeable air barrier material. Inside access doors shall be weather-stripped. Alternatively, R-5 or greater rigid insulation installed between the access cover and a rigid protective material (Plywood or other durable rigid material) under the entire insulation area is allowed. Insulation must be sealed around the perimeter to the access cover using caulk, adhesive or spray foam. The rigid protective material must be mechanically attached to the access cover to securely hold insulation in place. Access cover assembly must be tightly sealed using weather stripping around the entire perimeter.

b) Foam core doors with a minimum R-5 insulation rating (manufactured for exterior use) used in vertical wall underfloor access door installations will be permitted, provided gaskets or weather-stripping prevents air infiltration around the entire door perimeter.

6. Outside Access Doors for Underfloor Areas

Any outside access shall have a door that is easily opened to permit inspection, and shall be weather resistant. Vertical accesses may be screened when it is part of the crawl space ventilation system. Horizontal hatch

covers shall shed water. Wood in contact with soil or concrete shall be ground-contact approved. Existing covers are acceptable, provided that they are in good condition, weather-resistant and vermin-resistant.

7. Walls Between Conditioned Space and Underfloor Spaces

Uninsulated walls between conditioned and unconditioned spaces in the underfloor area, such as between vented crawlspaces and conditioned basements, shall be sealed for air leakage, insulated to a minimum of R-13 in a 2x4 cavity, and R-21 in a 2x6 cavity and create a continuous thermal boundary. When no wall exists, one shall be constructed and an effective air and thermal barrier shall be installed.

8. Rim Joist Insulation

a) In conditioned basements, insulation may be installed in direct contact with the wooden perimeter "band" or "rim" joist, provided each joist bay is sealed for air leakage prior to installation of insulation. Batt-type or foam insulation used in this application shall be tightly installed, securely fastened, be at least R-13 and comply with thermal and ignition barrier code requirements for "foam plastics," as detailed by the local building code.

b) Fibrous insulation exposed to the living space shall be covered with a human contact barrier.

c) Sill plate shall be sealed to the foundation wall.

9. Water Pipes in Crawlspaces

Water pipes that are located in the crawlspace shall be insulated in accordance with requirements in HW – Hydronic and Water Pipe Insulation

10. Underfloor Insulation Support

Underfloor insulation support systems shall be installed so that the insulation remains in contact with the sub-floor, flat and in place for the life of the house.

Floor Insulation Support Materials

Use one of the following materials to support floor insulation:

Wood lath—Wood lath shall be a minimum of 1/4 x 1 inch for spans up to 48". Spans greater than 48" shall use at a minimum nominal 1x2 lumber.

Twine—Twine shall be non-stretching polypropylene or polyester.

Wire—Wire shall be stainless steel, copper or an equivalent material of similar corrosion resistance, with a minimum diameter of 0.040 inch (size 18 AWG). Self-supporting wire hangers are not acceptable.

Hand stapling is not a durable fastening technique and is not allowed.

Staples shall be driven with a power-actuated stapler to achieve at least 5/8 inch penetration.

Fasteners for lath, twine or wire may be either hot-dipped galvanized nails, screws or corrosion-resistant staples that are at least 18-gauge and long enough to penetrate wood at least 5/8 inch.

Spacing Requirements for Support Systems

The maximum spacing for support systems is as follows:

Table 1: Spacing Requirements

Spans	Maximum Spacing
24 inches or less	18 inches apart
48 inches	12 inches apart
60 inches	8 inches apart
72 inches	6 inches apart

Batt-type insulation shall be supported no more than 3 inches from the ends. This support shall be parallel to the end of the batt. Small pieces of insulation shall be supported.

Support systems shall be fastened to the underside of floor joists. Joists may be skipped; however, the maximum spacing shall not exceed 12 inches. The maximum span of skipped joists shall not exceed 48 inches.

11. Spray Foam Floor Insulation

Spray foam and rigid foam insulation are acceptable for insulating underfloor areas provided the installation complies with thermal and ignition barrier requirements for "foam plastics," as detailed by the local building code.

Insulation support requirements are waived when only spray foam is used underfloor. Fiberglass insulation installed below spray foam insulation shall be in direct contact with the spray foam insulation and shall be installed using approved support materials.

12. Vapor Retarders

If a vapor retarder is installed as a part of floor insulation it shall have a perm rating of 1.0 or less and shall be located between the insulation material and the conditioned space. There shall only be one vapor retarder in the assembly and it shall be in direct contact with the subfloor and face the conditioned space of the home.

13. Vapor Barrier/Ground Cover

a) Upon completion of the installation of underfloor insulation, an acceptable ground-cover moisture barrier shall be present (new 6 mil black or UV stabilized and opaque polyethylene or existing black 4 mil polyethylene). All joints shall be overlapped with sufficient material (12 inch overlap) so that all ground surface area is covered.

b) If underfloor insulation is installed over an unheated basement and the basement has no exposed soil, then the provisions for a ground cover and ventilation are not required. Any basement with exposed soil shall be treated as a crawl space and the provisions for ventilation shall be required. In addition, a ground cover shall be present which covers the entire area of exposed soil.

c) An air barrier or skirting shall protect underfloor insulation that is exposed to wind, including unskirted crawl spaces and cantilever floors.

d) Ground covers are not required for houses which are built on stilts and have no perimeter system which creates a crawl space.

14. Crawlspace Ventilation

Underfloor crawlspace areas shall be ventilated by openings in exterior foundation walls. Such openings shall have a net area of not less than 1 square foot for each 150 square feet of underfloor area. Openings shall be located as close to corners as practical and shall provide cross ventilation. The required area of such openings shall be approximately equally distributed along the length of at least two opposite sides. They shall be covered with corrosion-resistant wire mesh with mesh openings of 1/4-inch in dimension. Existing vent openings which are covered with wire mesh need not be modified.

Exception: Where the local code official determines that moisture due to climate and ground water conditions is not considered excessive, operable louvers may be allowed and the required net area of vent opening may be reduced to 1/1500, provided the underfloor exposed soil surface area is covered with an approved ground cover

Exception: If continuously operated mechanical exhaust ventilation is provided at a rate of 1.0 CFM per 50 ft^2 of floor area, ventilation openings may be omitted.

FI.2. MANUFACTURED HOME - UNDERFLOORS

1. Duct Insulation, Duct Sealing and Air Sealing

All HVAC ductwork, including plenums, shall be repaired, sealed and properly supported, according to Section D.2 "MANUFACTURED HOME – HVAC DUCTS", before underfloor insulation is installed.

a) HVAC ducts and plenums shall be inspected for leaks or openings, and leaks or openings shall be repaired and sealed before underfloor insulation is installed. Non-ducted return-air systems in the floor cavity shall be eliminated.

b) All plumbing penetrations through the floor (e.g., bathtubs, clothes washers, sinks, etc.) shall be sealed before underfloor insulation is installed.

2. Installation Requirements

a) Insulation shall be installed so that there is no air space between the insulation and the subfloor. Compression of insulation is allowed in order to assure or maintain continuous contact with the bottom of the floor.

b) Insulation shall be protected by a moisture permeable covering or skirting before underfloor insulation is installed. Skirting shall be as close to the ground as practical.

c) A minimum of R-22, or the maximum R-value achievable to fill the floor cavity, shall be installed. Special care shall be taken when insulating the floors of tip-outs.

d) Where required by State or local codes, a moisture permeable rodent barrier shall be in place and in good repair after the insulation is installed.

e. All exhaust ducts, such as those for kitchen ranges and dryers, shall be extended to the outside of the crawl space and sealed to prevent exhausted air from returning to the crawl space and/or the Mobile Home when skirting exists.

f. Operational combustion intakes shall be ducted to the outside of the crawlspace.

g. All water drains, including condensate drains from air conditioning equipment, shall be extended outside the crawl space.

h. Water-pipe heaters may be installed in localities with sustained periods of subfreezing winter temperatures. If installed, such heaters shall include a thermostat set at approximately 35 degrees Fahrenheit. If installed, they shall be placed around all water pipes (both hot and cold water) in the crawl space, inside the pipe insulation, and in contact with the pipe surface. Such installations shall conform to the National Electric Code and any applicable State or local code.

i. Once the rodent barrier is removed, the techniques used to insulate a manufactured home underfloor are the same as with site-built homes. Refer to Section FL – Site Built Underfloor Insulation Section of this manual for underfloor specifications.

j. Underfloor insulation support systems shall be installed so that the insulation remains in contact with the sub-floor, flat and in place for the life of the house. Support of the insulation may be provided by wood lath, twine, wire, or other material as approved by the Utility.

k. If installed, vapor retarders installed as a part of floor insulation shall have a perm rating of 1.0 or less and shall be located between the insulation material and the conditioned space.

l. After underfloor insulation has been installed, an acceptable ground-cover moisture barrier shall be present (new 6 mil black polyethylene or UV stabilized and opaque polyethylene or existing 4 mil polyethylene) where skirting exists. All joints shall be overlapped with sufficient material (12 inch overlap) so that all ground surface area is covered.

m. When skirted, the entire enclosed underfloor crawl space area shall be ventilated by openings in the skirting. Such openings shall have a net area of not less than 1 square foot for each 150 square feet of underfloor area, including the crawl space area of all structures which open to that of the Mobile Home. Openings shall be located as close to corners as practical and shall provide cross ventilation. The required area of such openings shall be approximately equally distributed along the length of at least two opposite sides. They shall be covered with corrosion-resistant wire mesh with maximum mesh openings of 1/4-inch. Existing vent openings which are covered with wire mesh need not be modified.

n. Exception: Where the local code official determines that moisture due to climate and groundwater conditions are not considered excessive, operable louvers may be allowed and the required net area of vent opening may be reduced to 1/1500.

o. Exception: If continuously operated mechanical exhaust ventilation is provided at a rate of 1.0 CFM per 50 ft^2 of floor area, ventilation openings may be omitted. (IBC 1203.3)

p. Water pipes that have not been covered by underfloor insulation shall be insulated according to Section HW – HYDRONIC AND WATER PIPE INSULATION".

3. Blown Floor Insulation

a) Preparation

I. Rodent barrier shall be repaired to prevent insulation from falling from floor cavity.

II. Repair materials shall be stitch-stapled to the rodent barrier, or otherwise permanently affixed.

III. Plumbing leaks shall be repaired and decayed wood flooring shall be replaced.

b) Materials

I. Materials used to patch the rodent barrier shall be breathable, durable and capable of supporting the insulation.

II. Expanding foam or other sealants shall be used to seal accessible floor penetrations.

III. Fiberglass insulation shall be used in this application

c) Installation

I. Underfloor cavities shall be insulated either by drilling small holes in the rodent barrier or by drilling through the rim joists perpendicular to the floor joists. If holes are drilled through the rodent barrier, they shall be patched. Holes drilled in the rim joists shall be patched with wooden plugs. The entire floor cavity shall be packed with insulation in order to achieve an R-22 minimum, or the highest R-value practical.

WI.1. WALL INSULATION

1. Unfinished Walls

a. Applies to Exposed Frame Wall, Concrete, or Masonry Walls

b) Walls shall be insulated to a minimum of R-13 for nominal 4 inch walls and to a minimum of R-21 for nominal 6 inch walls.

c) Above grade, vapor diffusion retarders shall be installed when practical. Vapor retarders installed as part of wall insulation shall have a perm rating of 1.0 or less and shall be located between the insulation material and the conditioned space.

d) Vapor retarders shall not be installed over fiberglass batt insulation on below grade wall applications. Fiberglass insulation shall not be installed in contact with below-grade concrete walls.

e) When rigid insulation is applied to the exterior stud surfaces of an open cavity frame wall, the insulation shall be installed tightly to minimize air leakage and an adequate air/vapor retarder shall be installed at the warm side of the insulation.

f) Upon completion of exterior surface retrofits, the exterior wall shall be weather-tight with window and door jambs extended or modified to provide adequate drainage. Siding shall be installed per insulation or siding manufacturer instructions or as approved by the Utility.

2. Exterior Wall Cavities

a) All cavities in all exterior walls shall be completely filled, and insulated to the highest practical R-value, including small cavities above, below and on the sides of windows and doors. Any damage to interior walls resulting from wall insulation installation shall be repaired.

b) Insulation shall not be installed in wall cavities that serve as air ducts for heating or cooling. Cavities containing wall-mounted heaters shall not be insulated, unless there is blocking (with photographic documentation) to prevent contact with insulation.

c) Insulation may be installed in wall cavities that are:

I. 3-1/2 inch deep or greater with 1 inch or less of existing insulation; or

II. less than 3-1/2 inch deep with no existing insulation.

d) Fibrous blown-in insulation material shall be installed using the insert tube method. Foams shall be installed according to manufacturer specifications.

e) The entire stud bay shall be filled, including cavities requiring more than one hole due to blocking in the cavity.

f) Stud bays containing supply plumbing may be left uninsulated to prevent freezing.

g) When access holes for installing the insulation are drilled through the interior wall or finish siding and sheathing, the Utility shall verify that all holes were adequately plugged and provide a tight weatherproof seal.

h) Plugs shall be sealed, weatherproofed and ready to paint. Plugs shall not be vented. Plugs shall be made of material that will not shrink or expand, which would result in damage to the siding or finish.

If the surface of the plug is below the surface of the siding, the hole shall be filled with non-shrinking filler. If siding is removed and holes are drilled in the sub-siding, the holes shall be plugged.

i) The UL label or equivalent label shall appear on every bag of loose fill cellulose material. It shall include the file number (R-number) of the manufacturer and the issue number for labels purchased. This ensures adherence to the requirements of CPSC cellulose regulation 16 CFR 1209 (i.e., critical radiant flux, smoldering combustion, settled density, and corrosiveness).

j) Only non-combustible insulation (per ASTM E-136) shall be installed in wall cavities adjoining fireplaces and/or chimneys.

k) Insulation shall not be installed in wall cavities which contain electric space heaters unless fire stops are present which isolate the heater from all contact by the insulation material. Verification shall be accomplished by removal of the heater after the insulation is installed or from photographs from installation trade ally.

HW ALL HOMES - HYDRONIC AND WATER PIPE INSULATION

Basic Installation Requirements

a) All water pipes and hydronic heating system pipes in unconditioned spaces shall be insulated with a product designed and manufactured for the purpose of insulating pipes.

b) Pipe insulation shall be installed to minimum R-values determined according to the following:

   I. Hydronic heating system pipes having a nominal diameter of 1-inch or less shall be insulated with material having a minimum R-value of 3.6.

   II. Hydronic heating system pipes with a nominal diameter greater than 1 inch shall be insulated with material having a minimum R-value of 5.4.

   III. Water pipes shall be insulated with material having a minimum R-value of 3.0.

c) The piping shall be free from water leaks and properly secured to support the weight of the piping and insulation.

d) Pre formed insulation shall be properly sized. Corners shall be mitered to fit tightly. The inside diameter of the pre-formed insulation shall match the outside diameter of the water pipes. If connections and corners are larger than piping, exposed joints shall be insulated with insulation that matches the outside diameter of the connection and corners.

e) Pipe insulation shall be secured with twine, corrosion resistant wire or plastic compression ties every 12 inches, and within 3 inches of the ends. Tape is not allowed to secure water pipe insulation.

f) Pipe insulation shall have a minimum finished thickness of 1 inch. When water pipes run next to a beam or joist, the insulation shall be secured to the beam, at a minimum, every 12 inches. Insulation material shall be cut and folded or otherwise molded to completely cover all sections of the system without overly compressing the insulation to less than 1" thickness or allowing gaps to occur in the insulation.

g) Pipe insulation shall be installed on piping, joints, elbows, valve bodies, etc. except those sections of the system which are obstructed by existing wood framing members or other components.

h) All slits and joints in the material shall be sealed on hydronic heating system pipes.

i) If insulation is installed on piping exposed to the weather, then such insulation shall be resistant to degradation from moisture, ultra-violet light, and extremes in temperature, or a jacket or facing shall be installed that protects the insulation from these conditions. Manufacturer's recommendation for outdoor installations shall be followed in all cases.

j) Pipe insulation shall meet the following provisions:

   I. Pipe insulation materials shall be comprised of mineral fiber, elastomers, urethanes, isocyanurates, or other suitable materials that are designed and manufactured for this purpose;

   II. The material shall be capable of withstanding continuous operating temperatures of not less than 180 degrees Fahrenheit. Hydronic pipe insulation shall be capable of continuous operation at 250 degrees Fahrenheit;

   III. The product shall be finished with a jacket or facing, suitable to resist damage and degradation. However, if the product is made of closed cell foam and is installed in a location protected from

moisture, ultraviolet light and extremes in temperature, then a protective jacket or facing is not required; and

IV. The insulation material, any jackets or facings, and adhesive, if used, shall be tested as a composite product and shall have a flame spread rating of 25 or less, and a smoke density of 50 or less when tested in accordance with ASTM E-84.

k) Pipe insulation shall not be installed on pressure temperature relief valves, on the operating portion of any valves, or on any other control and safety devices.

l) Where water pipe heaters are present for freeze protection, such heaters shall include a thermostat set at approximately 35 degrees Fahrenheit and they shall be placed around all water pipes (both hot and cold water) in the crawl space inside the pipe insulation in contact with pipe surface. Such installation shall conform to provisions of the National Electric Code and any applicable State or local code.

Windows Specifications

WD ALL HOMES - PRIME WINDOW, SLIDING GLASS DOOR, AND FRENCH DOOR REPLACEMENTS

Window requirements shall also apply to patio doors unless otherwise stated. Windows shall be installed and supported according to the manufacturer's specifications. If window weight cavities exist and there is access, the weights shall be removed and the cavity shall be filled with insulation and sealed.

1. **Eligible measures include:**
   a) Replacement of prime windows with NFRC certified products;
   b) Replacement of patio doors (French or Sliding) with NFRC certified products.
2. **Overview for all glazing systems:**
   a) Safety glazing shall be used where required by current state code. See sections on safety glass for details.
   b) Windows shall operate smoothly and safely.
   c) Screens shall be furnished with all operable windows.
   d) Exterior wood, including frame, sash, trim, stops and sills, shall be, at a minimum, caulked and primed.
   e) Hardware and fasteners shall be aluminum, stainless steel, or other noncorrosive materials.
   f) Gaps of over 3/8 inch between the exterior siding and the window shall be covered with solid trim material. Exterior or interior voids over 3/8 inch in depth or width shall be filled with window manufacturer-approved materials, such as backer rod, non-expanding foam or similar product prior to caulking, if caulking will be applied.
   g) Replacement windows shall be certified and labeled for U-factor in accordance with the simulation, testing, and certification procedures of the National Fenestration Rating Council Incorporated (NFRC).
   h) Sources of evident water penetration through window openings shall be located and corrected. Necessary repairs shall be accomplished by the Homeowner or Homeowner Designee prior to installation of windows.
3. **Rip Fin (Block or Finless) Windows**

Windows without nailing flanges shall be secured to the rough opening within 4 inches of each side corner and a minimum 12 inches on center thereafter. Windows shall not be smaller than the interior jamb and shall fit tightly with it. Gaps of over 3/8 inch between the exterior siding and the block window shall be trimmed. Exterior or interior voids over 3/8 inch in depth or width shall be filled with backer rod prior to caulking. Exposed block windows shall be flashed.

The flashing shall tuck up behind the exterior siding at least 1 inch. Flashing shall have a downward bending lip of at least 1/4 inch on the front and ends. Block or Finless windows shall be supported at the "fin line."

4. **Flush Fin (Surface-Mounted) Windows**

Flush Fin windows designed for this purpose may be installed on houses with aluminum or vinyl siding, provided that the top of the windows have a metal or other code approved rigid flashing inserted behind the existing siding material and over the top of the window, or the top of the windows are protected by an

overhang as shown below. Installing surface-mounted windows on site-built houses or on manufactured homes with wood siding is not allowed. This section does not apply to stucco-mounted windows.

5. Nail Fin (Cut-Out) Windows

Nail fin windows have nailing flanges and are installed on the sheathing or framing. The tops of windows shall have metal or other code-approved rigid flashing inserted behind the existing siding material and over the head trim piece, unless the tops of the windows are protected by an overhang as shown below.

The sides of cut-out windows shall be flashed with 15-pound felt or an equivalent building paper. The building paper shall be inserted underneath the existing siding and building paper and over the fins of the windows. The bottoms of cut-out windows shall be flashed with 15-pound felt or an equivalent building paper. The building paper shall be inserted underneath the existing siding and over existing building paper and under the bottom fins of the windows. All filler and trim pieces must be thoroughly caulked. The flashing shall tuck up behind the exterior siding at least 1 inch. Flashing shall have a downward bending lip of at least 1/4 inch on the front and ends.

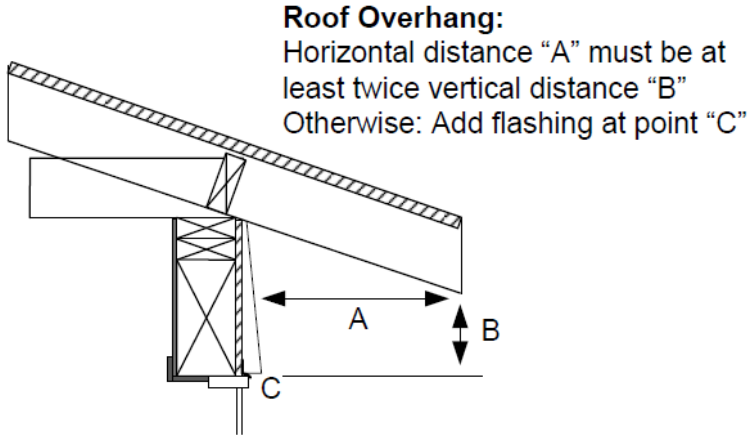

6. Stucco or Brick-Mounted Windows

Stucco-mounted windows are replacement windows that mount directly to the frames of existing windows.

The fin of the new window and the outer flange of the existing window shall be sealed with a sealant designed for this purpose. The sealant must stick to both the vinyl fin and the aluminum flange. The lip of the existing aluminum flange shall be at least 3/8 inch wide. The gap between the frame of the replacement window and the interior trim shall be caulked. If the gap exceeds 1/4 inch, the gap shall be filled with closed cell backer rod, or chinked and caulked, and then the gap shall be covered with a permanently attached trim material and caulked on both the top and bottom seams.

The bottom rail of the existing window shall be cleaned to free up weep holes. The miter joints on the fin of the replacement window shall be smooth so the corners do not bulge from the aluminum window.

7. Miscellaneous Requirements

The bottom rail of a patio door shall be firmly supported within 1/2 inch of exterior edge of the frame. Any wood that touches the ground or concrete must be pressure-treated.

8. Health and Safety Requirements

All windows shall meet the following egress and safety glazing specifications. If state or local code becomes more restrictive than these specifications, then installers shall be required to meet current state or local code.

9. General Safety Glazing Requirements

Safety glazing requirements shall apply to replacement windows and patio doors, multi-glazing inserts and storm windows.

All windows shall meet the following egress and safety glazing specifications.

Each pane requiring safety glazing shall bear the manufacturer's permanent safety glazing label. This label of identification shall be etched or ceramic-fired on the glazing and be clearly visible in one of the corners of the light.

10. Hazardous Locations Requiring Safety Glazing

The following shall be considered specific hazardous locations for the purpose of glazing:

a) Glazing in entry doors

b) Glazing in patio doors and French doors

c) Glazing in a fixed or operable panel that meets all of the following conditions:

   I. The exposed area of an individual pane is greater than 9 square feet

   II. The bottom edge is less than 18 inches above the floor

   III. The top edge is greater than 36 inches above the floor

   IV. One or more walking surfaces are within 36 inches horizontally of the glazing

   V. Glazing in hot tubs, whirlpools, saunas, steam rooms, bathtubs and showers, where the bottom edge of the glazing is less than 60 inches above the drain inlet.

d) Glazing in a fixed or operable panel adjacent to a door where the nearest vertical edge is within a 24-inch arc of the door in a closed position and whose bottom edge is less than 60 inches above the floor or walking surface.

11. Emergency Egress Openings

a) Every sleeping room shall have at least one operable window or exterior door approved for emergency egress or rescue if required by local code.

b) All egress or rescue window installations shall meet local code requirements.

AS Air Sealing & Testing

Whole house air sealing includes a pre and post blower door test, and a measurement of building tightness. Prescriptive air sealing as a part of insulation measures is not considered air sealing as a program measure.

1. Air Sealing Requirements

a) All accessible and applicable items on **AIR SEALING CHECKLIST** shall be sealed.

b) All locations except the following are considered to be accessible:

I. Locations not physically accessible due to building structure or mechanically fastened materials

II. Top plates located adjacent to eave line

III. Top plates covered by more than five inches of loose-fill insulation or a combination of loose-fill and batt/blanket insulation.

c) Whole house air sealing requires compliance with Section MV – Mechanical Ventilation.

Compliance with Section MV.3 – Whole-House Mechanical Ventilation is not required if air sealing is performed solely as part of an insulation measure.

d) Air leakage testing, in accordance with Section 4, shall occur immediately prior to the installation of any air leakage control measures. Post-installation testing shall occur immediately following the installation of air leakage control measures.

Testing is not required if air sealing is performed solely as part of an insulation measure.

e) Air sealing and testing will be performed by a certified technician

Technician certification is not required if air sealing is performed solely as part of an insulation measure.

Combustion Appliance Zone testing shall be performed in accordance with Section 4. **Testing is not required if windows are the sole measure installed.**

Idaho Weatherization Installation Checklist

General Program Requirements

- ☐ ***For insulation:*** Home must have an electric heating system <u>or</u> an electric cooling system serving at least 80 percent of the home's conditioned floor area.
  - Electrically heated home incentives apply to houses with a permanently installed electric furnace, heat pump or electric zonal heating systems (baseboard or ceiling/wall heaters). Space heaters do not qualify.
    - Homes with an electric heating system ***and*** a central air conditioner only qualify for the **"Homes with electric heating system"** incentives.
  - Electrically cooled home incentives apply to houses with a permanently installed ducted electric central air conditioner and a non-electric (gas, oil or propane) heating system.
- ☐ ***For windows:*** Home must have an electric heating system serving at least 80 percent of the home's conditioned floor area.
  - Electrically heated home incentives apply to houses with a permanently installed electric furnace, heat pump or electric zonal heating systems (baseboard or ceiling/wall heaters). Space heaters do not qualify.
- ☐ Incentives are only applicable for insulation installed between conditioned and unconditioned spaces.
  - Interior wall insulation installed between a kitchen and a living room does not qualify because it is installed between two conditioned spaces.
  - Wall and attic insulation in an unfinished and un-heated/cooled garage does not qualify because insulation would be installed between two unconditioned spaces (garage and outside).

Attic Insulation

Requirements

- ☐ Pre-existing insulation of R-20 or less
- ☐ Final insulation of minimum R-49
- ☐ Insulation is in continuous contact with attic surface
- ☐ Attic hatch dams installed
- ☐ Attic access doors and pull-down stairs are insulated and weather-stripped
- ☐ Available in electric heated and electric cooled homes (see definitions above)
- ☐ Incentives are only applicable for insulation installed between conditioned and unconditioned spaces

Best practices

- ☐ Baffles for eave and soffit vents installed (if applicable)
- ☐ Baffles for light fixtures, fan/lights, fan/heaters, chimneys are installed

- ☐ Exhaust ventilation duct work is properly connected and vented to outside
- ☐ HVAC ductwork in attic is sealed and insulated to program requirements as outlined in HVAC trade ally program manual
- ☐ All accessible surfaces between conditioned and unconditioned space are insulated (ceiling, walls, skylight shaft, knee walls, etc.)
- ☐ Air sealing checklist items have been addressed – see HES program residential weatherization specification for details
- ☐ Water pipes should be insulated – see HES program residential weatherization specification for details

Floor Insulation

Requirements:

- ☐ Pre-existing insulation of R-18 or less
- ☐ Final insulation of minimum R-30
- ☐ Access hatches are insulated and weather-stripped
- ☐ Available in electric heated homes only (see definitions above)
- ☐ Incentives are only applicable for insulation installed between conditioned and unconditioned spaces
- ☐ Incentives are not applicable for floor insulation installed in ceilings of basements

Best practices:

- ☐ All accessible surfaces between conditioned and unconditioned space are insulated (floor, walls, knee walls, etc.)
- ☐ If a surface separating conditioned and unconditioned space does not exist, one must be constructed to accommodate program required R-values (Example: if no wall exists between crawl space and conditioned basement, one must be constructed, sealed and insulated)
- ☐ Ground vapor barrier is installed (if applicable)
- ☐ Exhaust ventilation duct work is properly connected and vented to outside
- ☐ Air sealing checklist items have been addressed – see HES program residential weatherization specification for details
- ☐ HVAC Ductwork under floors is sealed and insulated to program requirements as outlined in HVAC trade ally program manual
- ☐ Water pipes should be insulated – see HES program residential weatherization specification for details
- ☐ Under-floor insulation is supported in accordance with weatherization specifications – see HES program residential weatherization specification for details

Wall Insulation

Requirements:

- ☐ Pre-existing insulation of R-4 or less
- ☐ Final insulation of minimum R-13 or fill the cavity
    - Exterior wall cavities should be completely filled
- ☐ Available in electric heated and electric cooled homes (see definitions above)
- ☐ Incentives are only applicable for insulation installed between conditioned and unconditioned spaces
- ☐ Interior walls, such as walls between rooms, do not qualify
- ☐ Spray foam insulation along rim joists does not qualify
- ☐ Basements must be finished or conditioned living space (permanently installed heating or ducted for cooling) in order to qualify.

Best practices

- ☐ Access holes for installing the insulation are plugged and sealed
- ☐ Insulation is not installed in walls used as air ducts
- ☐ Insulation is not installed in contact with wall-mounted heaters
- ☐ Air sealing checklist items have been addressed – see HES program residential weatherization specification for details

Windows

Requirements:

- ☐ Tier 1 windows: U-factor 0.30 or lower
- ☐ Tier 2 windows (R-5): U-factor 0.22 or lower
- ☐ Windows are fully installed, and operable where applicable
- ☐ Available in electric heated homes only (see requirements above)
- ☐ Installations between unconditioned spaces and outside do not qualify, such as in an unfinished/unconditioned garage.
- ☐ Replacement of windows that have previously received an incentive do not qualify.

General Weatherization Best Practices

- ☐ Vent pipe for gas or water heating equipment is connected and vented to outside
- ☐ Program compliant carbon monoxide detector installed if permanently installed heating or water heating combustion appliance is present

Project Diagram – Attic Insulation[2]

Following is an example of an attic insulation project diagram. This is intended to function as a resource to assist trade allies in calculating qualified square footage of attic insulation for incentive applications. Although this diagram is not required, the program encourages trade allies to use this resource if it is helpful.

The program will only pay incentives for insulation installed between conditioned and unconditioned spaces.

- A finished or conditioned living space has a permanently installed heating or ducted cooling system.
- Unconditioned spaces exist outside of the home's thermal boundary (e.g., garages, crawlspaces, the exterior of a home, and potentially a basement.)

Normally, basements are conditioned spaces. Basements are not usually thermally isolated from the main living area and contain space conditioning ducts. Basements are also used for storage and frequently contain laundry facilities and other living spaces.

An unconditioned basement would have these properties: Thermally isolated from the main floor by insulation in the floor. Insulated, weather-stripped door (if above floor plane) and insulated stairwell walls where thermal plane penetrates floor, air sealed (caulked, foamed penetrations) wiring plumbing, sealed duct penetrations and sealed, insulated ducts. No supply registers. Please contact the program for more information if you would like assistance in determine conditioned vs. unconditioned space.

[2] Updated: August 2012

s turn the answers on.

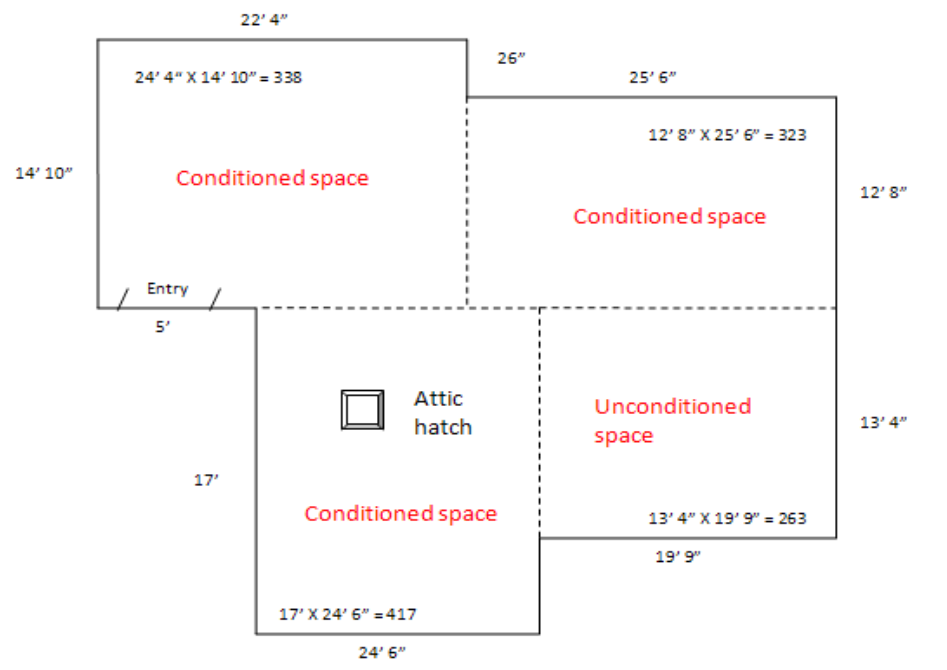

Total Qualified Square Footage = (338 + 417 + 323) 1,078

Project Diagram – Windows[3]

For window projects, an accurate drawing of the footprint of the house is required:

- Indicate the location of each window.
- Indicate the dimensions of each window.

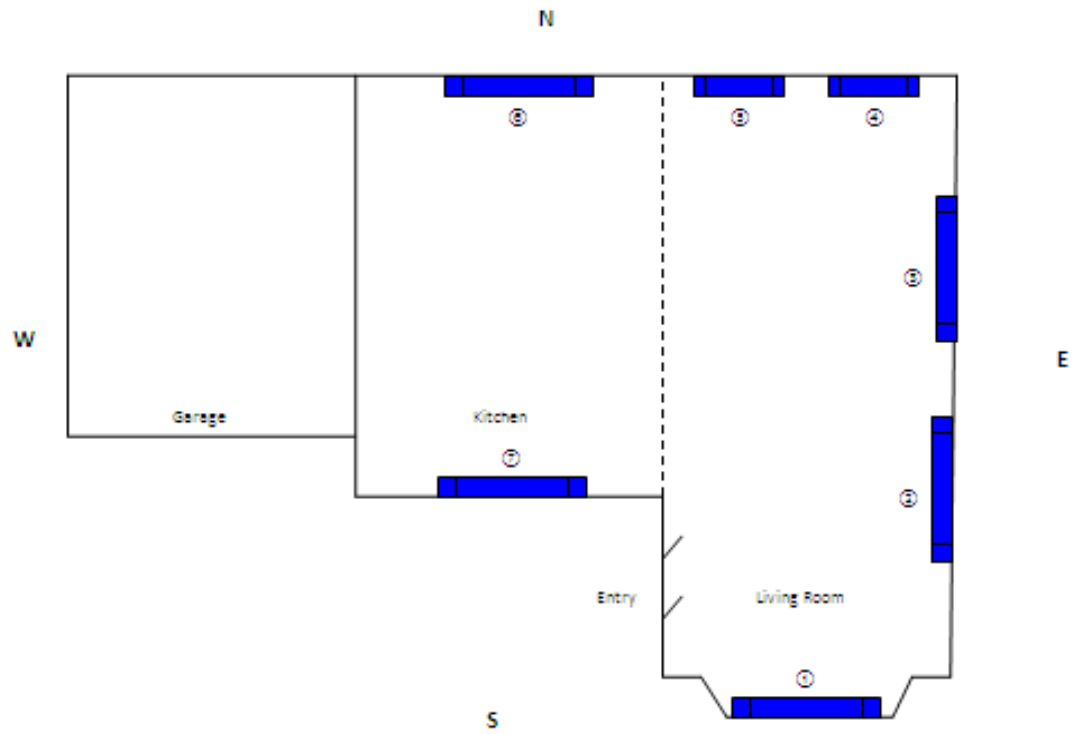

	Location	Dimensions
1	Living room – South facing	4' X 4'
2	Living room – East facing	4' X 4'
3	Living room – East facing	4' X 4'
4	Living room – North facing	2' X 2'
5	Living room – North facing	2' X 2'
6	Kitchen – North facing	4' X 4'
7	Kitchen – South facing	4' X 4'
8		

[3] Updated: August 2012